THE ZONING ORDINANCE

The Zoning Ordinance of the City of Mount Vernon, the Town of Cynthiana, the Town of Poseyville, and Unincorporated Posey County (as Amended)

Posey County Area Plan Commission
Coliseum Building, 126 East 3rd Street, Room 223
Mount Vernon, Indiana 47630
812-838-1323

Effective Date	Jurisdiction	Ordinance Number	Action Date
September 1, 2012	Posey County Board of Commissioners	2012-080702	08/07/2012
September 1, 2012	City of Mount Vernon Common Council	2012-16	08/08/2012
September 1, 2012	Town of Cynthiana Town Council	2012-8-14.3	08/14/2012
September 1, 2012	Town of Poseyville Town Council	2012-08-15-02	08/15/2012

Table of Contents

153.000 TITLE AND PURPOSE 6
153.001 TITLE 6
153.002 PURPOSE, INTERPRETATION, AND JURISDICTION 6
153.003 CONFIRMATION OF THE AREA PLANNING COMMISSION AND THE AREA BOARD OF ZONING APPEALS 7
153.010 ZONING DISTRICTS 8
153.011 DESIGNATION OF ZONING AND OVERLAY DISTRICTS 8
153.012 ZONING MAP ESTABLISHED 8
153.013 DISTRICT BOUNDARY DESCRIPTION AND INTERPRETATION 8
153.020 GENERAL PROVISIONS 9
153.021 GENERAL LAND USE LIMITATIONS 9
(A) Limitation on Land Use 9
(B) Limitation on Domestic Animals in Non-Agricultural Zones 9
(C) Standards for Mixed Uses 9
(D) Commercial Vehicle Parking 9
(E) Access Through Residentially Zoned Property 9
(F) House Cars, Trailers and Mobile Homes 10
153.022 GENERAL LOT LIMITATIONS 10
(A) Platting Requirement 10
(B) Prerecorded Lots 10
(C) Division of Lots 10
(D) Street Frontage Required 10
(E) One Single-Family Dwelling Per Lot of Record 10
(F) Lot Area Width and Exceptions 10
153.023 HEIGHT EXCEPTIONS 10
153.024 YARDS 11
153.025 EXISTING BUILDING ENCROACHMENT ON FRONT YARDS 12
153.026 SCREENING WALL OR FENCE 13
153.030 AGRICULTURAL (A) DISTRICT PROVISIONS 14
153.031 PURPOSE AND INTENT - "A" DISTRICT 14
153.032 USE REGULATION - "A" AGRICULTURAL DISTRICT 14
153.033 BULK AND AREA REQUIREMENTS 17
153.034 EXCEPTION OF AGRICULTURAL USES 19
153.035 SALES OF AGRICULTURAL LAND 19
153.040 RESIDENTIAL(R) DISTRICTS PROVISIONS 20
153.041 PURPOSE AND INTENT –RESIDENTIAL (R) DISTRICTS 20
153.042 USE REGULATIONS -- R-1 or RS RESIDENTIAL SINGLE-FAMILY DETACHED DISTRICT 20
153.043 BULK AND AREA REQUIREMENTS -- R-1 or RS RESIDENTIAL SINGLE-FAMILY DETACHED DISTRICT 22
153.044 USE REGULATIONS – RT RESIDENTIAL TOWNHOUSE DISTRICT 24
153.045 BULK AND AREA REQUIREMENTS -- RT RESIDENTIAL TOWNHOUSE DISTRICT 25
153.046 USE REGULATIONS -- R-2 RESIDENTIAL TWO-FAMILY DISTRICT 27
153.047 BULK AND AREA REQUIREMENTS-- R-2 TWO-FAMILY RESIDENTIAL DISTRICT 28
153.048 USE REGULATIONS-- RM or R-3 RESIDENTIAL MULTIPLE-FAMILY DISTRICT 31
153.049 BULK AND AREA REQUIREMENTS— RM or R-3 RESIDENTIAL MULTIPLE FAMILY –

DISTRICT 32
153.050 SITE DEVELOPMENT PLAN REVIEW AND APPROVAL: MULTIFAMILY COMPLEXES OVER EIGHT UNITS....34
153.051 USE REGULATIONS–RMH RESIDENTIAL MOBILE HOME DISTRICT....35
153.052 BULK AND AREA REQUIREMENTS— RMH RESIDENTIAL MOBILE HOME DISRICT....36
153.053 TRACK DEVELOPMENT STANDARDS — RMH RESIDENTIAL MOBILE HOME DISRICT....37
153.054 SITE PLAN REVIEW AND APPROVAL OF MOBILE HOME PARKS....39
153.060 PUD – PLANNED UNIT DEVELOPMENT DISTRICT....45
153.061 PURPOSES – PUD – PLANNED UNIT DEVELOPMENT DISTRICT....45
153.062 GENERAL PROVISIONS – PUD – PLANNED UNIT DEVELOPMENT DISTRICT....45
153.063 USES PERMITTED IN PLANNED UNIT DEVELOPMENT....45
153.064 BULK AND AREA REQUIREMENTS IN PLANNED UNIT DEVELOPMENTS....47
153.065 OFF-STREET PARKING AND LOADING IN PLANNED UNIT DEVELOPMENTS....48
153.066 ADMINISTRATION OF PLANNED UNIT DEVELOPMENT....48
153.070 O or R-O RESIDENTIAL-OFFICE DISTRICT....51
153.071 PURPOSE -- O or R-O RESIDENTIAL-OFFICE DISTRICT....51
153.072 USE REGULATIONS – O or R-O RESIDENTIAL-OFFICE DISTRICT....51
153.073 BULK AND AREA REQUIREMENTS -- O or R-O RESIDENTIAL-OFFICE DISTRICT....54
153.074 SITE PLAN REVIEW....55
153.080 BUSINESS OR COMMERCIAL DISTRICT PROVISIONS....57
153.081 PURPOSES – BUSINESS OR COMMERCIAL DISTRICT....57
153.082 USE REGULATIONS – B-1 or NC NEIGHBORHOOD COMMERCIAL DISTRICT....58
153.083 BULK AND AREA REQUIREMENTS – B-1 or NC NEIGHBORHOOD COMMERCIAL DISTRICT 60
153.084 USE REGULATIONS – B-1A or CS COMMERCIAL SHOPPING DISTRICT....63
153.085 BULK AND AREA REQUIREMENTS – B-1A or CS COMMERCIAL SHOPPING DISTRICT....65
153.086 USE REGULATIONS – B-2 or CG COMMERCIAL GENERAL DISTRICT....68
153.087 BULK AND AREA REQUIREMENTS – B-2 or CG COMMERCIAL GENERAL DISTRICT....70
153.088 USE REGULATIONS – B-3 or CH COMMERCIAL HIGH INTENSITY DISTRICT....73
153.089 BULK AND AREA REQUIREMENTS – B-3 or CH COMMERCIAL HIGH INTENSITY DISTRICT 75
153.090 USE REGULATIONS – CBD CENTRAL BUSINESS DISTRICT....78
153.091 BULK AND AREA REQUIREMENTS – CBD CENTRAL BUSINESS DISTRICT....80
153.092 SITE DEVELOPMENT PLAN REVIEW FOR ALL BUSINESS AND COMMERCIAL DISTRICTS. 80
153.100 MANUFACTURING DISTRICT PROVISIONS....82
153.101 PURPOSE....82
153.102 USE REGULATIONS – M-1 Light Manufacturing District....82
153.103 BULK AND AREA REQUIREMENTS– M-1 Light Manufacturing....84
153.104 SITE DEVELOPMENT PLAN REVIEW....85
153.105 USE REGULATIONS – M-2 Medium Manufacturing District....86
153.106 BULK AND AREA REQUIREMENTS– M-2 Medium Manufacturing District....87
153.107 SITE DEVELOPMENT PLAN REVIEW....88
153.110 FLOOD HAZARD (FH) AREA OR FLOOD PRONE DISTRICT....89
153.111 STATUTORY AUTHORIZATION, FINDINGS OF FACT, PURPOSE AND OBJECTIVES....89
153.112 DEFINITIONS....89
153.113 GENERAL PROVISIONS....98
153.114 ADMINISTRATION....99
153.115 Provisions for Flood Hazard Reduction....101
153.116 VARIANCE PROCEDURES....105
153.117 SEVERABILITY....107
153.120 Section Reserved for Future Provisions....107
153.130 Section Reserved for Future Provisions....108
153.140 USE UNITS....108

153.141 INTRODUCTION OF THE USE UNITS 108
153.145 USE UNIT 0 ACTIVE AGRICULTURE 108
153.146 USE UNIT 1 AREAWIDE USES BY RIGHT 108
153.147 USE UNIT 2 AREA-WIDE SPECIAL EXCEPTION USES 109
153.148 USE UNIT 3 PUBLIC PROTECTION AND UTILITY FACILITIES 109
153.149 USE UNIT 4 COMMUNITY SERVICES & SIMILAR USES 110
153.150 USE UNIT 5 SINGLE-FAMILY DETACHED DWELLING 112
153.151 USE UNIT 6 SINGLE-FAMILY ATTACHED DWELLING 112
153.152 USE UNIT 7 MULTIPLE-FAMILY DWELLING AND SIMILAR USES 113
153.153 USE UNIT 8 MANUFACTURED or MODULAR HOME DWELLING 114
153.154 USE UNIT 9 MOBILE HOME DWELLING 115
153.155 USE UNIT 10 OFF-STREET PARKING AREAS 115
153.156 USE UNIT 11 OFFICES AND STUDIOS. 115
153.157 USE UNIT 12 ENTERTAINMENT ESTABLISHMENTS AND EATING ESTABLISHMENTS OTHER THAN DRIVE-INS 117
153.158 USE UNIT 13 CONVENIENCE GOODS AND SERVICES 117
153.159 USE UNIT 14 SHOPPING GOODS AND SERVICES 118
153.160 USE UNIT 15 OTHER TRADES AND SERVICES 120
153.161 USE UNIT 16 GASOLINE SERVICE STATIONS 123
153.162 USE UNIT 17 AUTOMOTIVE AND ALLIED ACTIVITIES 123
153.163 USE UNIT 18 DRIVE-IN RESTAURANTS 124
153.164 USE UNIT 19 HOTEL, MOTEL AND RECREATION FACILITIES 125
153.165 USE UNIT 20 COMMERCIAL RECREATION: INTENSIVE 126
153.166 USE UNIT 21 BUSINESS SIGNS AND OUTDOOR ADVERTISING 126
153.167 USE UNIT 22 RESEARCH AND DEVELOPMENT 132
153.168 USE UNIT 23 WAREHOUSING AND WHOLESALING 132
153.169 USE UNIT 24 MINING AND MINERAL PROCESSING 132
153.170 USE UNIT 25 LIGHT MANUFACTURING 133
153.171 USE UNIT 26 MEDIUM MANUFACTURING AND INDUSTRY 133
153.172 USE UNIT 27 HEAVY MANUFACTURING AND INDUSTRY. 135
153.173 USE UNIT 28 HOME OCCUPATIONS 136
153.180 OFF-STREET PARKING AND OFF-STREET LOADING 138
153.181 PURPOSE 138
153.182 APPLICABILITY OF REQUIREMENTS 138
153.183 GENERAL REQUIREMENTS 138
153.184 DESIGN STANDARD OFF-STREET PARKING AREAS 139
153.185 DESIGN STANDARDS FOR OFF-STREET LOADING AREAS 139
153.190 Section Reserved for Future Provisions 141
153.200 NONCONFORMING USES AND STRUCTURES 141
153.201 GENERAL 141
153.202 NONCONFORMING USES OF UNIMPROVED LAND. 141
153.203 NONCONFORMING USE OF BUILDING OR BUILDINGS AND LAND IN COMBINATION 141
153.204 NONCONFORMING SIGNS 142
153.205 NONCONFORMING LOTS 142
153.206 NONCONFORMING STRUCTURES 142
153.207 NONCONFORMING PARKING, LOADING AND SCREENING REQUIREMENT NONCONFORMING USES 143
153.208 NONCONFORMING MOBILE HOME, PARK AND SUBDIVISION 143
153.209 NONCONFORMING VARIANCE 143
153.210 ENFORCEMENT AND FEES 144
153.211 ENFORCEMENT DUTY OF PLAN COMMISSION 144
153.212 COMPLAINTS REGARDING VIOLATION 144
153.213 PENALTIES FOR VIOLATION 144
153.214 ATTORNEYS FEES 144

153.215 COST ON APPEAL 145
153.216 CODE OF ETHICS 145
153.217 FEES 145
153.220 IMPROVEMENT LOCATION PERMIT, SITE PLAN REVIEW AND AGREEMENTS 146
153.221 IMPROVEMENT LOCATION PERMIT 146
153.222 CONSTRUCTION AND USE TO BE AS APPROVED IN APPLICATIONS, PLANS AND PERMITS 147
153.223 SITE DEVELOPMENT PLAN APPROVAL FOR MORE THAN EIGHT ATTACHED DWELLING UNITS AND USES IN THE BUSINESS/COMMERCIAL AND MANUFACTURING ZONING DISTRICTS 147
153.224 Land Use and Development Agreements 151
153.230 Reserved for Future Provisions 153
153.240 BOARD OF ZONING APPEALS 153
153.241 ESTABLISHMENT OF THE POSEY COUNTY AREA BOARD OF ZONING APPEALS 153
153.242 POWERS OF THE BOARD 153
153.243 PROCEEDINGS OF THE AREA BOARD OF ZONING APPEALS 154
153.244 NOTICE OF PUBLIC HEARING OF THE AREA BOARD OF ZONING APPEALS 154
153.245 VARIANCES 154
153.246 SPECIAL EXCEPTIONS 156
153.247 APPEALS FROM THE ENFORCEMENT OF THE CHAPTER 158
153.248 REVIEW BY CERTIORARI OF DECISIONS 158
153.250 ZONING TEXT AND MAP AMENDMENTS 159
153.251 GENERAL. 159
153.252 ZONING TEXT AND MAP AMENDMENTS 159
153.260 Reserved for Future Provisions 162
153.270 DEFINITIONS 162
APPENDIX A: USE UNIT BY ZONING DISTRICT 174
APPENDIX B: ZONING BULK and AREA STANDARDS (page 1) 176
APPENDIX B: ZONING BULK and AREA STANDARDS (page 2) 178
APPENDIX C: ZONING SIGN STANDARDS (page 1) 180
APPENDIX C: ZONING SIGN STANDARDS (page 2) 181
APPENDIX D: USES REFERENCED TO USE UNIT 182

153.000 TITLE AND PURPOSE

153.001 TITLE

This ordinance shall be cited as the "Zoning Ordinance of the City of Mount Vernon, Town of Cynthiana, Town of Poseyville and Unincorporated Posey County, Indiana" (hereinafter called the "Zoning Ordinance").

153.002 PURPOSE, INTERPRETATION, AND JURISDICTION

(A) Purpose

This code is enacted for the purposes of promoting the public health, safety, comfort, morals, convenience, and general welfare; lessening or avoiding congestion in public ways; and securing adequate light, and convenience of access and safety from fire, flood and other dangers.

(B) Adoption clause Title 36 Article 7 Chapter 4

IC 36-7-4-100 thru IC 36-7-4-1616 referred to as Local Planning and Zoning Statutes as added by Acts 1981 PL 309 Section 23 or as it may hereinafter be amended is hereby adopted by reference and made part hereof.

(C) Interpretation

(1) Validity of other Laws. Where this code imposes a greater restriction upon the use of structure or land or upon height or bulk of structures, or requires larger open space or yards than are imposed by other ordinances, laws, or regulations, the provisions of this ordinance shall govern. However, nothing in this ordinance shall be constructed to prevent the enforcement of other ordinances, laws, or regulations which prescribe more restrictive limitations.

(2) Relation to Public or Private Easements, Covenants and Agreements. It is not intended that this ordinance interfere with, abrogate, or annul any easements, covenants, or agreements between public or private parties, provided, however, that where the provisions of this ordinance are more restrictive than any deed or agreement, the provisions of this ordinance shall prevail.

(3) Severability. In case any portion of this ordinance shall be invalid or unconstitutional, as declared by a court of competent jurisdiction, the remainder of the code shall not thereby be invalid, but shall remain in full force and effect.

(4) Tense and Definition. For the purpose of this ordinance certain terms and words are to be used and interpreted as defined in Sections 153.000 through 153.270 of this code: words used in the present tense shall include future tense; words in the singular number include the plural and words in the plural number include the singular. Except where the natural construction of the writing indicates otherwise, the words "shall" and "will" are mandatory. Additionally, use of the term ordinance refers to this ordinance and future amendments thereto.

(D) Jurisdiction

(1) Territorial Jurisdiction. This code shall be in full force and effect and shall apply the all lands the City of Mt. Vernon, the Town of Cynthiana, the Town of Poseyville and Unincorporated Posey County, Indiana.

(2) Annexed territory

(a) Any territory here after annexed to the City of Mt. Vernon, the Town of Cynthiana or the Town of Poseyville shall, upon such classification, remain in the same zoning district classification shown for Unincorporated Posey County on the Official Zoning Map of Posey County. Said district shall be subject to all conditions and regulations applicable to such zoning district until said zoning district is later re-designated in accordance with this ordinance.

(b) Procedures for the rezoning of land (zoning map amendment) are set forth in Section 153.250 of this ordinance. In the event the owner/owners of the land to be annexed desire a different zoning designation simultaneously with annexation, a petition for rezoning may be filed concurrent with

annexation request.

(c) Public Property. Property owned, leased or operated by the City of Mt. Vernon, the Town of Cynthiana, the Town of Poseyville or the government of Posey County, Indiana or any other public or governmental body or agency shall be subject to the terms of this ordinance, excluding lands and/or structures wholly owned by the State and Federal governments.

153.003 CONFIRMATION OF THE AREA PLANNING COMMISSION AND THE AREA BOARD OF ZONING APPEALS

(A) Purpose

(1) An Area Plan Commission for the City of Mt. Vernon, the Town of Cynthiana, the Town of Poseyville and the Unincorporated Area of Posey County, Indiana, is hereby confirmed. The Posey County Area Plan Commission shall exercise the planning and zoning powers for the City of Mt. Vernon, the Town of Cynthiana, the Town of Poseyville, and the Unincorporated Area of Posey County, Indiana. (IC 36-7-4-102 and IC 36-7-4-203(b), as added by Acts 1981, PL. 309, Sec. 23.)

(2) An Area Board of Zoning Appeals for the City of Mt. Vernon, the Town of Cynthiana, the Town of Poseyville and the Unincorporated Area of Posey County, Indiana, is hereby confirmed. The Posey County Area Board of Zoning Appeals shall exercise the powers of appeals from any action by any entity under the zoning ordinance (except those of the Area Plan Commission and local legislative bodies), approval and denial of Special Exceptions and certain uses (including special exceptions, special uses, contingent uses and conditional uses) from the zoning ordinance, and approval or denial of Variances from the development standards of the zoning ordinance for the City of Mt. Vernon, the Town of Cynthiana, the Town of Poseyville, and the Unincorporated Area of Posey County, Indiana (IC 36-7-4-902 and IC 36-7-4-918.1 through 918.5). The Posey County Area Board of Zoning Appeals shall have the power to make interpretations of the zoning map and text. The Posey County Area Board of Zoning Appeals is expressly prohibited from granting a Variance from a use district or classification under IC 36-7-4-918.3.

153.010 ZONING DISTRICTS

153.011 DESIGNATION OF ZONING AND OVERLAY DISTRICTS

For the purpose of regulating the use of land, water and building and height, bulk, population density and open space, County of Posey and participating cites and towns are hereby divided into the following districts:

Symbol	Districts
A	Agricultural
RS or R-1	Residential Single-Family
RT	Residential Townhouse
R-2	Residential Two-Family
RM or R-3	Residential Multiple Family
RMH	Residential Mobile Home Park
PUD	Planned Unit Development (residential with limited commercial)
R-O or O	Residential-Office District
B-1 or NC	Neighborhood Commercial
B-1A or CS	Commercial Shopping
B-2 or CG	Commercial General District
B-3 or CH	Commercial High Intensity (commercial/warehousing/wholesaling)
CBD	Central Business District
M-1	Manufacturing Light
M-2	Manufacturing Medium/Heavy

While the above zoning districts establish appropriate land use, the County of Posey and participating cites and towns establish the following overlay districts that impose additional development standards in environmentally sensitive areas or in other geographic areas of special concern:

Symbol	Districts
FH or FP	Flood Hazard/Flood Prone District

Uses permitted by right or by Special Exception by Zoning District are summarized in Appendix A: Use Unit by Zoning District, and Appendix D: Uses Referenced by Use Unit lists the assignment of individual uses to Use Unit.

153.012 ZONING MAP ESTABLISHED

The locations and boundaries of the various districts as defined herein shall be established by ordinance and shall be shown and delineated on the Official Zoning Map of the Unincorporated Posey County, the City of Mt. Vernon, the Town of Cynthiana and the Town of Poseyville, Indiana. The Official Zoning Map shall be maintained and located in the Area Planning Commission office. The Official Map may be divided into parts, and such parts may be separately employed for identification purposes when adopting or amending the Official Zoning Map or for any reference to the Official Zoning Map.

153.013 DISTRICT BOUNDARY DESCRIPTION AND INTERPRETATION

District boundary lines shall be described by legal description or by a map. When a legal description is used, the boundary line shall be deemed to extend to the centerline of abutting streets and shall be so designated on the Official Zoning Map. When a map is used, district boundary lines shall be established by dimensions, property lines, recorded lot lines, or the centerline of abutting street, alley, or railroad right-of-way, as the same were of record at the time of adoption. In all cases where there is doubt as to the exact location of district boundary lines, the same shall be determined by the Board of Zoning Appeals.

153.020 GENERAL PROVISIONS

153.021 GENERAL LAND USE LIMITATIONS

(A) Limitation on Land Use

No person, firm or corporation shall use or permit to be used, any land or buildings, nor shall any person, firm, or corporation make, erect, construct, move, alter, enlarge or rebuild or permit the making, erection, construction, moving, altering, enlarging, or rebuilding of any building, structure, or improvement, which is designed, arranged or intended to be used or maintained for any purpose or in any manner except in accordance with the use, height, area, yard, space, and other requirements established in the district in which such land, building, structure, or improvements is located. The exception would be as provided by Section 153.200, Nonconforming Uses. Nothing in this ordinance shall be deemed to require a change in the plans, construction, or designated use of any building, where a building permit has been lawfully issued prior to the effective date of this ordinance and pursuant to such permit, said construction is diligently carried to completion. Upon completion, such building or use shall be deemed nonconforming and may continue as regulated by Section 153.200, Nonconforming Uses.

(B) Limitation on Domestic Animals in Non-Agricultural Zones

In all zoning districts except the Agricultural District, animals permitted on lots or in structures are limited to domestic animals (such as dogs and cats), a~~nd the number of animals is limited to less than four (4) Four~~ (4) ~~or more dogs, cats or other domestic animals constitute~~ A kennel ~~which~~ is a use of right in Use Unit 15 permitted in the B-2/CG, B-3/CH, M-1 and M-2 Districts. A Variance may be obtained from the Board of Zoning Appeals for ~~the number of domestic animals~~ or non-domestic animals permitted outside the Agricultural District. (strikeouts are deletions as amended 1-2-13 Posey County, 1-8-13 Cynthiana, 1-9-13 Poseyville, 1-24-13 Mt. Vernon)

(C) Standards for Mixed Uses

(1) If a structure contains both a residential use and a nonresidential use and the gross floor area occupied by the residential use exceeds 25 percent of the total floor area of the structure, the structure is a residential use and shall conform to the regulations of the O/O-R District.

(2) If the gross floor area occupied by the residential use is 25 percent or less of the total floor area of the structure, the structure is a nonresidential use and shall conform to the regulations of the Business/Commercial District in which it is located.

(D) Commercial Vehicle Parking

(1) Commercial vehicles and equipment, other than those used in the principal use, may not be parked or stored on property in an Agricultural, Residential, Office or Business/Commercial District, except the B-3/CH, CBD (by Special Exception), M-1 and M-2 Districts. Vehicles designed and intended for agricultural use are permitted in the Agricultural District.

(2) A commercial vehicle originally designed or intended as a private passenger vehicle (pickup trucks up to and including one-ton pickup trucks, passenger vans, automobiles and station wagons) which has been materially or structurally altered for use in connection with a commercial use, may be parked on residential property when used as a commuter vehicle by the owner or resident of the premises. However, such vehicle while parked on the property, may not be loaded with trash, scrap materials or debris.

(E) Access Through Residentially Zoned Property

Residentially zoned property may not be used for public access to nonresidential property except for agricultural purposes.

(F) House Cars, Trailers and Mobile Homes

The following may not be used as living or sleeping quarters except when in the confines of an approved mobile home park or approved by Special Exception in the Agricultural District:

(1) Recreational vehicles,
(2) Trailers (including travel, storage or construction trailers),
(3) Mobile homes with a minimum livable floor area less than 650 square feet
(4) Manufactured homes with a minimum livable floor area less than 950 square feet.

153.022 GENERAL LOT LIMITATIONS

(A) Platting Requirement

For the purposes of providing a proper arrangement of streets and assuring the adequacy of open spaces for traffic, utilities, and access of emergency vehicles, commensurate with the intensification of land use customarily incidental to a change of zoning, a platting requirement is established as follows:

(1) For any land which has been rezoned upon application of a private party, no Certificate of Occupancy permit shall be issued until that portion of the tract on which the permit is sought has been included within a subdivision plat or re-plat, as the case may be. This plat shall be submitted to the Planning Commission for their review, recommendation, and approval. Upon final approval, the plat shall be filed in the office of the Posey County Recorder.

(2) The Planning Commission, pursuant to their exclusive jurisdiction over subdivision plats, may remove the platting requirement upon a determination that the above stated purposes have been achieved by previous platting or could not be achieved by a plat or re-plat.

(B) Prerecorded Lots

Any lot in a recorded subdivision may be considered a lot suitable for building purposes. A lot of record which existed in its present configuration and size prior to 1957 may be considered suitable for building purposes.

(C) Division of Lots

A lot shall not hereafter be divided into two or more lots, unless all lots resulting from such division conform to all the applicable regulations of the zoning district in which the lots are to be located, and also comply with the Posey County Subdivision Ordinance.

(D) Street Frontage Required

No lot shall contain any building used in whole or in part for residential purposes unless such lot has a minimum of 70 feet of frontage on a public street or dedicated right-of-way, except a substandard lot of record, a lot within an approved Planned Unit Development (PUD) or a lot within an approved townhouse development in the Residential Townhouse (RT) District or a lot within an approved mobile home park in the Residential Mobile Home Park (RMH) District.

(E) One Single-Family Dwelling Per Lot of Record

Not more than one single-family detached dwelling may be located on a lot.

(F) Lot Area Width and Exceptions

The lot area and width requirements of the zoning districts shall not apply to the uses included within Use Unit 3, Public Protection and Utility Facilities, other than fire protection and ambulance services.

153.023 HEIGHT EXCEPTIONS

The following structures shall not be subject to the height limitation of the district in which they are located: (A) Belfries, chimneys, cupolas, domes, elevators, penthouses (structure for housing machinery, not intended as a dwelling), flagpoles, monitors, smokestacks, spires, cooling towers, and ventilators, provided they are not intended for human residency.

(B) Ground and structure-supported accessory antennas and aerials, including elevating structures (poles and towers), which do not exceed a total aggregate height of sixty (60) feet above the natural land grade and which meet the following requirements:

(1) No portion of the antenna, aerial, elevating structure, or any anchor or guy line may extend beyond the established side yard requirements of the district in which located.

(2) In a residential district no portion of the antenna, aerial, elevating structure, or any anchor or guy line, may extend beyond the front yard building setback line or extend into any established front yard or into any side yard; provided that:

(a) Height and location restrictions shall not be applicable to radio communication facilities or utility facilities or storage tanks owned, operated and maintained by any municipal, county, state or federal governmental entities;

(b) The restrictions established by this section may be modified by the Board of Zoning Appeals through the approval of a Variance. The Board of Zoning Appeals may require additional safeguards and conditions as it deems necessary in granting such a Variance.

153.024 YARDS

(A) Compliance with Yard Requirements: Except as otherwise provided, the required yards shall be open and unobstructed from the ground to the sky. Yards provided for a building for the purpose of complying with the provisions of this code shall not be considered the yard for any other building, nor considered the yard for any other lot.

(B) Permitted Yard Obstructions. Obstructions are permitted in the required yards as follows:

(1) Cornices, canopies, eaves, and similar architectural features may not project more than two feet into a required yard.

(2) Fire escapes may project not more than four and one-half (4-1/2) feet into a required yard.

(3) Fences, hedges, plant materials and walls may be located in any yard provided that street-intersection corner traffic-visibility is maintained. Fences and walls in yards shall not exceed a height of six (6) feet except uses per Section 153.026(A)(2). Excluding the Agricultural District, any fence or wall which projects into or encloses a required front yard shall not exceed a height of three (3) feet and when on a corner lot, shall be constructed of a material which allows unobstructed vision (i.e. open chain link or decorative split rail) except uses per Section 153.026(A)2. In all zoning districts except the Agriculture District, all fencing and screening shall comply with Section 153.026(A). The Board of Zoning Appeals may modify these limitations through a requested Variance.

(4) No fences, hedges, plant materials, walls or other obstructions to vision extending in excess of three (3) feet above the established center-line grade of the street shall be erected or maintained on that part of the corner lot that is included between the right-of-way lines of intersecting streets and a line intersecting them at points of twenty-five (25) feet distance from the intersection of the right-of-way lines of two (2) streets or the right-of-way lines of a street and railroad. If there is no dedicated roadway right-of-way, the right-of-way is assumed to be based on the applicable roadway functional class as if the roadway right-of-way had been dedicated (being from the street center line 25 feet for a “local street,” 40 feet for a “collector” or “secondary arterial,” 60 feet for a “primary arterial,” and 75 feet for a “divided primary arterial”).

(5) Signs which are permitted as accessory uses in agriculture, residential and office districts, may be located within any yard which is bounded by a public street, provided the sign is at least one-foot from the property line, is not located in the sight triangle of any public street intersection if the sign exceeds three (3) feet in height above the above the established center-line grade of the street, and does not obstruct sight distances on any exit driveway.

(6) In accordance with Use Unit 21, Business (on-premises) and Outdoor Advertising (off-premises) signs which are permitted by right or Special Exception, may be located within any yard which is bounded by a public street, provided the sign is at least one-foot from the property line, does not obstruct vision in the sight triangle of any public street intersection (i.e., the sign cannot block vision between three (3) feet

and ten (10) feet of height above the ground level of the approaching travel lanes to the intersection (nearest to the subject property if more than one approaching travel lane), and does not obstruct sight distances on any exit driveway.

(7) Swimming pools, hot tubs, spas, tennis courts, patios, fallout and other protective shelters shall be located in the rear yard, shall not intrude into any dedicated easements, and shall have a minimum setback of ten (10) feet from any side yard or rear lot lines.

(8) Private swimming pools (and all accessories thereto).

(9) Customary accessory structures, such as clotheslines, barbecue pits, unenclosed gazebos, and playground equipment are allowed in side and rear yards, but prohibited in front and street side yards.

(10) If a lot abuts an alley intersection, any fence located within five (5) feet of the intersection of any public right-of-way (street with alley or alley with alley) must be of a material which permits an unobstructed view (i.e. open chain link or decorative split rail). This shall be measured along the property line if the property line falls along the edge of the alley roadway. In the event the property lines of a lot fall within the alley roadway, the five (5) feet of unobstructed vision shall be measured from the edge of the alley.

(C) Use of Yards in Residential and Office Districts:

(1) No inoperative or unlicensed motor vehicles (including recreational vehicles or trailers) shall be parked or stored within the front or exterior side yard in any Residential or Office District. No inoperative or unlicensed motor vehicles (including recreational vehicles or trailers) parked or stored in an exterior rear yard shall be from visible the public way or adjacent property in any Residential or Office District.

(2) No vehicle shall be parked except on a hard surfaced area constructed of dust free "all-weather material" (see Section 150.270 definition) in any Residential or Office District.

(D) Satellite Communications Antennas. Satellite Antennas are regulated as follows:

(1) Satellite antennas are a permitted use in RS/R-1, RT, R-2, RM/R-3, RMH, and O/R-O Districts provided they meet the following standards:

(a) Shall be ground mounted or mounted on the building roof provided the roof mounted antenna does not exceed four (4) feet in height.

(b) Shall be setback from the perimeter property line(s) one foot for every foot in height.

(c) Ground mounted antenna shall not exceed thirteen (13) feet in height at the grade where it is mounted.

(d) Shall not be permitted as a principal use on the lot.

(2) Satellite antennas are permitted as a matter of right in Agricultural, Business/Commercial, and Manufacturing Districts. If the antenna is to be located on a lot which abuts an Residential or Office District, the antenna shall be setback from the common property boundary two (2) feet for every one (1) foot of height above grade.

(3) Satellite antennas which do not meet the standards as set forth above shall require approval of a Variance by the Board of Zoning Appeals.

(4) Satellite antennas which have been installed prior to the effective date of this ordinance shall be permitted to continue.

153.025 EXISTING BUILDING ENCROACHMENT ON FRONT YARDS

Where an existing building or buildings on the same side of the street and within the same block encroach upon their required front yard (or street side yard) or building setback, the required front yard or building setback for new construction shall be established as follows:

(A) If the proposed building is to be located more than two hundred (200) feet from an encroaching building, the proposed building shall conform to the front yard (or street side yard) established for the district in which the proposed building is to be located.

(B) If the proposed building is to be located within two hundred (200) feet of encroaching buildings on both sides and there are no intervening buildings, the front yard (or street side yard) or building setback shall be that

setback common to the existing buildings which are located within the block which the proposed building is to be constructed.

(C) If the proposed building is to be located within two hundred (200) feet of an encroaching building on one side, but not on both sides, and there are no intervening buildings, the front yard (or street side yard) or building setback shall be the average of the front yard (street side yard) or building setback of the adjacent building and the front yard (or street side yard) requirement of the district in which the proposed structure is located.

153.026 SCREENING WALL OR FENCE

(A) Specifications

(1) For the purpose of maintaining a compatible relationship between certain land uses, a screening requirement is established for the initiation and continuance of particular uses in such instances as may be hereafter designated.

(2) All junkyards, salvage yards, storage yards, outside storage yards, commercial vehicle and equipment parking lots, scrap yards, scrap metal reduction operations, garbage reduction operations, or similar operations to any of the afore listed, shall be completely enclosed with an opaque fence not less than eight (8) feet in height. This fencing requirement is mandatory for all storage areas for inoperable vehicles or inoperable equipment in conjunction with repair shops or similar operations when such storage areas abut the Residential or Office Districts or are visible from the public way.

(3) When the provisions of this code require the construction of a screening wall or fence as a condition for the initiation and subsequent continuance of a use, the screening wall or fence:

(a) Shall be constructed with customary fencing materials which are compatible with the surrounding area, and shall be designed and arranged to provide visual separation of uses irrespective of vegetation. Examples of customarily used fencing materials are:

(i) Chain link fence with privacy slats

(ii) Stockade type fencing material

(iii) Decorative brick walls

(iv) Previously used materials shall not be used except in the case of bricks.

(v) Walls built with concrete or cinder block are prohibited.

(b) Shall not exceed three (3) feet in height in any front yard or street side yard, but otherwise shall be six (6) feet in height;

(c) Shall be constructed with all braces and supports on the interior, except when both sides are of the same design and appearance;

(d) Shall be erected prior to the occupancy of the building or initiation of the use required to be screened.

(e) Shall not be topped by barbed wire, razor wire, and broken glass, and shall not be electrified.

(B) Maintenance. The screening wall or fence shall be maintained by the owner of the lot containing the use which requires the fence construction. Failure to maintain the screening wall or fence after notice by the duly appointed public official shall constitute an offense hereunder.

(C) Modification of the Screening Wall or Fence Requirement. The Board of Zoning Appeals, as a Variance, may:

(1) Modify or remove the screening requirement where existing physical features provide visual separation of uses;

(2) Modify the screening requirement where an alternative screening will provide visual separation of uses;

(3) Grant an extension of time to erect a screen where properties which are to be benefitted by the screen are undeveloped; and,

(4) Remove the screening requirement where the purpose of the screening requirement cannot be achieved.

153.030 AGRICULTURAL (A) DISTRICT PROVISIONS

153.031 PURPOSE AND INTENT - "A" DISTRICT

The "A" District has been established and shown on the Zoning Maps to minimize conversion of farm land to non-farm uses, to protect agricultural areas from urban encroachment, and to reduce conflicts over competing land uses. To regulate urban growth where it can be safely located and economically serviced by public facilities, such as roads, sanitary sewers, water lines, schools, police and fire protection, etc., through the rezoning process. The Area Plan Commission, in its review of a rezoning application from the "A" District to another use, shall evaluate the following before any recommendation is given to the applicable local legislative body:

(1) Degree of urbanization or present land use.
(2) Water - availability of supply relative to needs, quantity and quality.
(3) Liquid waste disposal - availability to expand municipal service, or suitability for septic systems.
(4) Roads, existing; increased design capacity, feasibility of physical expansion. Additional roads; functional road needs, and feasibility of construction.
(5). Adequate police and fire protection.
(6) Soils; substratum support, drainage, slope, stability, erosion and sedimentation.
(7) Alternative land use. Best use for land relative to existing resource priorities on uses of land.

153.032 USE REGULATION - "A" AGRICULTURAL DISTRICT

(A) Uses By Right. No building or structure or part thereof shall be erected, altered or used, or land used in whole or in part for other than one or more of the following uses and use conditions in Subsection C:

(1) Use Unit 0 - Active Agricultural Uses [including Animal Feeding Operations (AFOs), but excepting Concentrated Feeding Operations (CFOs) and Confined Animal Feeding Operations (CAFOs) that are permitted only by Special Exception and shall meet all State and Federal requirements.]

(2) Use Unit 1 – Areawide Uses by Right

(3) Use Unit 5 – Single-Family Detached Dwelling

(4) Use Unit 8 – Manufactured or Modular Home Dwelling

(5) Living quarters for persons employed on the premises and not rented or otherwise used as a separate dwelling.

(6) Bona fide farm building.

(7) Roadside stands offering for sale agricultural products are a permitted use, provided said stand is located at least twenty-five (25) feet from the front property line (roadway right-of-way line) and that off-street parking is provided. If there is no dedicated roadway right-of-way, the front yard setback from the center of the roadway is twenty-five (25) feet plus one-half the right-of-way width of the applicable roadway functional class as if the roadway had been dedicated (adding 25 feet for a “local street,” 40 feet for a “collector” or “secondary arterial,” 60 feet for a “primary arterial,” and 75 feet for a “divided primary arterial”).

(8) Day care in the home involving less than five unrelated children

(9) Accessory uses and structures when located on the same lot.

(10) Other than exempt subdivisions as provided in Posey County Subdivision Ordinance, subdivisions are prohibited within the "A" District.

(11) Landfills are prohibited within the "A" District.

(12) Use Unit 29-Mobile Office Trailer, so long as property does not abut a residential district. (as amended Mt.Vernon 5-16-13, Cynthiana 5-14-13, Poseyville 5-8-13, County 5-7-13)

(B) Use by Special Exception. Special Exception uses may be permitted by the Board of Zoning Appeals

following a public hearing, as indicated below, when such are deemed essential or desirable to the public convenience or welfare and are in harmony with the various elements or objectives of the Comprehensive Plan and use conditions in Subsection C.

(1) Use Unit 0 - Active Agricultural Uses - Concentrated Feeding Operations (CFOs) and Confined Animal Feeding Operations (CAFOs) meeting all State and Federal requirements.

(2) Use Unit 2 – Areawide Special Exception Uses

(3) Use Unit 3 – Public Protection and Utility Facilities

(4) Use Unit 4 – Community Services (including churches, nonprofit educational and philanthropic institutional uses, and children's nursery/day care center involving more than 4 children), but excluding protective shelters, residential treatment centers, transitional living centers

(5) Use Unit 9 – Mobile Home Dwelling

(6) Part of Use Unit 15 – Other Trades and Services – Limited to veterinary office, animal or kennel (including outside runs) and greenhouses.

(7) Use Unit 20 – Commercial Recreation: Intensive

(8) Part of Use Unit 21 – Business Signs & Outdoor Advertising – excluding outdoor advertising (off-premises) signs

(9) Use Unit 23 – Warehousing and Wholesaling

(10) Use Unit 24 – Mining and Mineral Extraction and Processing (including oil and gas well drilling and extraction).

(11) Part of Use Unit 27 – Heavy Manufacturing and Industry – Limited to livestock sales and commercial breeding.

(12) Use Unit 28 - Home Occupations

(13) Use Unit 29-Mobile Office Trailer when property abuts a residential district. (as amended Mt.Vernon 5-16-13, Cynthiana 5-14-13, Poseyville 5-8-13, County 5-7-13)

(C) Uses by Right and Special Exception Conditions.

(1) Any new residential use, other than that of the applicant, shall be set back a minimum of 1500 feet from the livestock facilities of any existing Confined Animal Feeding Operation (CAFO), 1000 feet from any existing Concentrated Feeding Operation (CFO), or 500 feet from any existing Animal Feeding Operation (AFO), unless the applicant and the owner(s) of the affected residence agree to a lesser distance and record a copy of such agreement in the Office of the Posey County Recorder.

(2) Concentrated Feeding Operations (CFOs) and Confined Animal Feeding Operations (CAFOs) are subject to site plan approval by the Area Plan Commission under Section 153.033(F).

(3) Concentrated and confined feeding operations are subject to the following separation requirements:

(a) New AFO's, shall be set back at least 500 feet from the boundary of any property zoned Residential, Office, or Business/Commercial, and from any community service in Use Unit 4.

(b) All new AFO's shall be setback at least 500 feet from any residence (other than that of the applicant) and any community service in Use Unit 4, unless the applicant and the owner(s) of the affected residence agree to a lesser distance and record a copy of such agreement in the Office of the Posey County Recorder.

(c) All new CFOs, CFO expansions, and AFO expansions to the extent the operation becomes a CFO, shall be set back at least 1,000 feet from any residence(other than that of the applicant) and any community service in Use Unit 4, unless the applicant and the owner(s) of the affected residence agree to a lesser distance and record a copy of such agreement in the Office of the Posey County Recorder.

(d) The livestock facilities of new CFOs shall be set back at least (1/2) mile from any property zoned Residential, Office, or Business/Commercial, and from any community service in Use Unit 4; and shall be set back at least one-half (1/2) mile from any shoreline or water line of a lake.

(e) New CAFOs shall be set back at least 1,500 feet from any residence (other than that of the applicant) and community services of Use Unit 4, unless the applicant and the owner(s) of the affected residence agree to a lesser distance and record a copy of such agreement in the Office of the Posey County

Recorder.

(f) The livestock facilities of new CAFOs shall be set back at least one-half (½) mile from any property zoned Residential, Office, or Business/Commercial, and from any community service in Use Unit 4; and shall be set back at least one-half (1/2) mile from any shoreline or water line of a lake.

(g) The property boundary of any Confined Animal Feeding Operations (CAFO) shall not be within two miles of an incorporated area.

(D) <u>Accessory Uses Permitted</u>. Accessory uses customarily incidental to a permitted principal use as follows:

(1) Any structure in support of Use Unit 0 (Active Recreation Uses) or Use Unit 1 (Areawide Uses by Right such as passive agricultural uses and open land uses)

(2) Garage

(3) Carport

(4) Signs:

(a) Bulletin Board

(b) Identification Sign

(c) Real Estate Sign

(d) Construction Sign

(5) Shelter (storm)

(6) Private swimming pool

(7) Child care in Home (4 or less)

(8) Yard sales

(E) Accessory Use Conditions

(1) General Conditions

(a) An accessory building erected as an integral part of the principal building shall be made structurally a part thereof, shall have a common wall therewith, and shall comply with the requirements applicable to the principal building.

(b) A detached accessory building shall not be located in the front or side yard or encroach upon a minimum building setback line, but this limitation shall not apply to garages and carports, provided the minimum required front yard or side yard set back line is observed.

(c) Within the rear yard, a detached accessory building shall be located at least five feet from interior lot line.

(2) Signs are permitted as follows in accordance with the yard requirement of Section 153.024(B)(5).

(a) One Bulletin Board may be erected on each street frontage of any educational, religious, institutional, or similar use in Use Unit 4 by Special Exception requiring announcement of its activities. The Bulletin Board shall not exceed twelve (12) square feet in surface area, nor fifteen (15) feet in height, and illumination, if any, shall be by constant light.

(b) One Identification Sign may be erected on each perimeter street frontage of a farm or permitted non- residential use. The sign shall not be permitted to exceed forty-eight (48) square feet of display surface area. The sign shall not exceed twelve (12) feet in height, and illumination, if any, shall be by constant light.

(c) During the period of construction, a temporary sign advertising the construction of improvements on the street premises, may be erected on each perimeter street frontage of the development. The sign shall not exceed forty (40) square feet in surface area, nor fifteen (15) feet in height, and illumination, if any, shall be by constant light.

(d) A temporary Real Estate Sign advertising the sale, rental, or lease of the premises may be erected on each street frontage of a lot. The sign shall not exceed four (4) square feet in surface area, nor six (6) feet in height, and illumination, if any, shall be by constant light.

(3) Private swimming pools (and all accessories thereto) shall meet safety requirements of State and local building codes.

(4) Child Care - In Home

(a) A maximum of four (4) non-related children may be cared for in the home without State Licensing. Five (5) to ten (10) children may be cared for in the home if the resident obtains a Special Exception and maintains continuous State Licensing. This number does not include those who reside in the residence.

(b) No person shall be employed other than a member of the immediate family residing on the premises or a substitute caregiver if the primary caregiver is unavailable.

(c) No signs advertising the Child Care Home shall be permitted on the lot.

(d) No exterior alteration of the dwelling or any customary accessory structure shall be made which would detract from the residential character of the structures

(e) State-licensed child-care homes in existence on the effective date of this ordinance, but which would be prohibited by these requirements, may continue as otherwise regulated herein.

(5) Yard sales shall occur only once a month for not more than three (3) consecutive days.

153.033 BULK AND AREA REQUIREMENTS

(A) Minimum Lot Area:

(1) Every lot upon which a structure is hereinafter erected, shall:

(a) Have a frontage not less than one-hundred fifty (150) feet on a street or public right-of-way or dedicated road, or shall have access to a public road or street by a dedicated right-of-way or access easement running with the land.

(b) Have a minimum area of one (1) acre with or without public sewers: however, the Posey County Health Department may require a larger lot where public sewers area lacking.

(c) Be a minimum of ten (10) acres for an Animal Feeding Operation (AFO), thirty (30) acres for a new Concentrated Feeding Operation (CFO), and one hundred-twenty (120) acres for a new Confined Animal Feeding Operation (CAFO).

(2) Where a lot has less width or area than herein required and was a lot of record (or contract sales, dated) prior to the effective date of this Ordinance, such lot may be occupied by any use permitted in the "A" District.

(B) Yards:

(1) Front Yard and Street Side Yard:

(a) Every lot used for a single-family detached dwelling shall have a front yard (or street side yard) not less than twenty-five (25) feet in depth. The front yard or street side yard may be more or less than the 25-foot minimum depending on the predominant front yard (or street side yard) setback of existing structures along the blockface. If only one lot on the blockface is developed, the front yard (or street side yard) should be an average of the 25-foot setback and the existing structure setback. When the proposed structure falls between two developed lots, the front yard setback should be the average of the two abutting lot structure setbacks.

(b) Every lot used for a non-residential use shall have a front yard (or corner lot side yard) not less than twenty-five (25) feet in depth.

(c) If there is no dedicated roadway right-of-way, the front yard (or corner lot side yard) setback from the center of the roadway is twenty-five (25) feet plus one-half the right-of-way width of the applicable roadway functional class as if the roadway had been dedicated (adding 25 feet for a “local street,” 40 feet for a “collector” or “secondary arterial,” 60 feet for a “primary arterial,” and 75 feet for a “divided primary arterial”).

(d) Concentrated and confined feeding operations shall have greater front yard and street side yard setbacks of one hundred (100) feet for Animal Feeding Operation (AFO), two hundred (200) feet for a new Concentrated Feeding Operation (CFO), and five hundred (500) feet for a new Confined Animal Feeding Operation (CAFO).

(2) Side Yards:

(a) Every lot used for a single-family detached dwelling shall have a side yard not less than fifteen

(15) feet in depth.

(b) Every lot used for a non-residential use shall have a side yard not less than ten (10) feet in depth. However, when a non-residential use by right or Special Exception abuts a Residential or Office District, the minimum side yard requirement in the A District of 10 feet shall be increased by one foot for each foot of building height exceeding 18 feet, but the required side yard shall not exceed 25 feet.

(c) Concentrated and confined feeding operations shall have greater side yard setbacks of one hundred (100) feet for Animal Feeding Operation (AFO), two hundred (200) feet for a new Concentrated Feeding Operation (CFO), and five hundred (500) feet for a new Confined Animal Feeding Operation (CAFO).

(3) Rear Yard:

(a) Every lot used for a one-family dwelling shall have a rear yard not less than twenty-five (25) feet in depth.

(b) Every lot used for a non-residential use shall have a rear yard not less than ten (10) feet in depth. However, when a non-residential use by right or Special Exception abuts a Residential or Office District, the minimum rear yard requirement in the A District of 10 feet shall be increased by one foot for each foot of building height exceeding 18 feet, but the required rear yard shall not exceed 25 feet.

(c) Concentrated and confined feeding operations shall have greater rear yard setbacks of one hundred (100) feet for Animal Feeding Operation (AFO), two hundred (200) feet for a new Concentrated Feeding Operation (CFO), and five hundred (500) feet for a new Confined Animal Feeding Operation (CAFO).

(C) Height:

(1) No residential building or structure or part thereof shall be erected or altered to a height exceeding two and one-half (2½) stories or thirty-five (35) feet.

(2) No non-residential structure, accessory building or structure or part thereof shall be erected or altered to a height exceeding forty-five (45) feet.

(D) Lot Coverage: The Combined area occupied by all principal and accessory buildings shall not exceed thirty percent (30%) of the area of the lot.

(E) Minimum Floor Area: The minimum livable floor area of a single-family detached dwelling or mobile home shall be nine-hundred and fifty (950) square feet. The minimum width of a single-family detached dwelling is twenty-three (23) feet wide; however, there is no minimum width for a mobile home.

(F) Site Plan Approval for Concentrated and Confined Feeding Operations: As a use by right, all new and expanding Animal Feeding Operations (AFOs) shall submit a site plan for approval by the Area Plan Commission Executive Director to obtain a "location improvement permit" per Section 153.221. All new and expanding Concentrated Feeding Operations (CFOs) and Confined Animal Feeding Operations (CAFOs) shall submit a site plan for approval by the Area Plan Commission in conjunction with the request for approval as a Special Exception by the Area Board of Zoning Appeals. Animal feeding operations and concentrated feeding operations shall comply with all state and county health and environmental regulations, as well as all federal laws governing such uses. New AFOs, CFOs, CAFOs and/or AFOs or CFOs expanding to a CAFO shall comply with all applicable state and federal laws and county regulations governing such uses, and shall also submit a site development plan to the Area Plan Commission for review, as well as approval as a Special Exception by the Area Board of Zoning Appeals.

(1) Site Development Plan Submission for CFOs and CAFOs. The following submissions shall be received from the applicant and shall be considered by the Posey County Area Plan Commission for site development plan approval:

(a) A scaled drawing representing the dimensions and the shape of the lot to be built upon, the size and location of existing buildings, and the location and dimensions of the proposed building or alteration;

(b) The boundaries of the property;

(c) The general topography of the region;

(d) The location of all residential dwellings, businesses, public buildings, and recreational areas within a one-half (½) mile radius of the livestock facilities;

(e) The existence, if any, and type of test/monitoring wells;

(f) An odor control plan that addresses confinement buildings, manure storage, dust and particulate matter;

(g) A mortality plan for disposal of dead animals;

(h) Any and all other information deemed necessary by the Posey County Area Plan Commission for the administration and enforcement of this ordinance, including but not limited to, existing or proposed uses of the buildings and land; compliance with county health department and drainage board regulations; and status of county highway department approval.

(2) Animal Feeding Operations

Animal Feeding Operations (AFOs) shall comply with all state and county health and environmental regulations. An AFO shall not be expanded to a CFO until it has been in operation for at least 3 years and meets all CFO requirements.

(3) Concentrated Feeding Operations (CFOs) and Confined Animal Feeding Operations (CAFOs)

Concentrated Feeding Operations and Confined Animal Feeding Operations shall comply with all applicable Indiana and federal laws governing such uses.

153.034 EXCEPTION OF AGRICULTURAL USES

Excluding Animal Feeding Operations (AFOs), Concentrated Feeding Operations (CFOs) and Confined Animal Feeding Operations (CAFOs), nothing contained in these regulations shall impose restrictions with respect to land used or to be used for agricultural purposes, or with the erection, maintenance, repair, alteration, remodeling, or extension of buildings or structures which are to be used for agricultural purposes, except that such buildings and structures for agricultural purposes shall conform to building set back lines.

153.035 SALES OF AGRICULTURAL LAND

Divisions of land for agricultural purposes only are except from the bulk and area requirements of Section 153.033.

153.040 RESIDENTIAL(R) DISTRICTS PROVISIONS

153.041 PURPOSE AND INTENT –RESIDENTIAL (R) DISTRICTS

(A) General Purpose. The Residential Districts are designed to:

(1) Achieve the residential objectives of the Comprehensive Plan.

(2) Protect the character of residential areas by excluding inharmonious commercial and industrial activities.

(3) Achieve a suitable environment for the family by permitting in residential areas appropriate neighborhood facilities, such as churches, schools, and certain cultural and recreational facilities.

(4) Preserve openness of the living areas and avoid overcrowding by requiring minimum yards, open spaces, lot areas, and by limiting the bulk of structures.

(5) Permit a variety of dwelling types and densities to meet the varying needs of families.

(6) Control the density of residential development to facilitate the planning for and economical provision of streets, utilities, and other public facilities.

(B) Purpose of RS or R-1, Residential Single-Family Detached District. This district is designed to permit the development and conservation of detached dwellings on individual lots.

(C) Purpose of RT, Residential Townhouse District. The RT district is designed to permit the development of fee simple townhouse dwellings. The district is intended to provide suitable areas for attached single-family dwellings on individual lots at medium densities.

(D) Purpose of R-2, Residential Two Family District. The district is intended to provide suitable areas for single-family attached dwellings at medium densities. While this district allows traditional two single-family attached dwellings on the same lot, it also allows a variety of innovative single-family attached dwelling unit types on individual fee simple lots including zero lot-lines, duplexes with one common wall on one lot or two separate lots, and quadruplexes with two common walls on four separate lots.

(E) Purpose of RM or R-3, Residential Multiple-family District. The district is designed to provide suitable areas for single-family, two-family, and multiple-family dwelling types in suitable environments in a variety of densities to meet the varying requirements of families. The types of uses permitted are:

(a) Single-family attached (patio homes, townhouses, condominiums)

(b) Two-family dwellings (duplexes)

(c) Multifamily (apartments)

(d) Group quarters (apartment hotel, rooming/boarding house, group home, elderly/retirement housing, fraternity/sorority home, convent/monastery, nursing homes, college resident halls)

(F) Purpose of RMH, Residential Mobile Home District. The RMH district is intended to provide an alternative to conventional single-family detached housing. To achieve this, the RMH district allows two different types of mobile home settings.

(1) Mobile Home Park. This designation is intended for commercial rental development. This designation provides for the location of mobile home parks and the leasing, regulation and control of mobile homes within a park site. It is further intended that mobile home parks be designed and adhere to high standards of development to insure compatibility with surrounding areas and safety for occupants of the mobile homes.

153.042 USE REGULATIONS -- R-1 or RS RESIDENTIAL SINGLE-FAMILY DETACHED DISTRICT

(A) Use by Right. No building or structure, or part thereof, shall be erected, altered or used, or land used in whole or in part, for other than one or more of the following permitted principal uses:

(1) Use Unit 1 – Areawide Uses by Right

(2) Use Unit 5 – Single-Family Detached Dwelling

(3) Use Unit 8 – Manufactured or Modular Home Dwelling

(B) Use by Special Exception. Special Exception Uses may be permitted by the Board of Zoning Appeals following a public hearing, as indicated below, when such are deemed essential or desirable to the public convenience or welfare and are in harmony with the various elements or objectives of the Comprehensive Plan.

(1) Use Unit 2 – Areawide Special Exception Uses

(2) Use Unit 3 – Public Protection and Utility Facilities

(3) Use Unit 4 – Community Services excluding protective shelters, residential treatment centers, transitional living centers, and including Children's Nursery/Day Care Center for more than 4 unrelated children (excluding those who live in the home).

(4) Use Unit 28 – Home Occupations

(5) Use Unit 29-Mobile Office Trailer(as amended Mt.Vernon 5-16-13, Cynthiana 5-14-13, Poseyville 5-8-13, County 5-7-13)

(C) Accessory Uses Permitted. Accessory uses customarily incidental to a permitted principal use not involving the conduct of any business, trade, occupation or profession, are permitted as follows.

(1) Garage

(2) Carport

(3) Signs:

(a) Bulletin Board

(b) Identification Sign

(c) Real Estate Sign

(d) Construction Sign

(4) Shelter (storm)

(5) Private swimming pool

(6) Child care in Home (4 or less)

(7) Yard sales

(D) Accessory Use Conditions.

(1) General Conditions

(a) An accessory building erected as an integral part of the principal building shall be made structurally a part thereof, shall have a common wall therewith, and shall comply with the requirements applicable to the principal building.

(b) A detached accessory building shall not be located in the front or side yard or encroach upon a minimum building setback line, but this limitation shall not apply to garages and carports, provided the minimum required front yard or side yard set back line is observed.

(c) Within the rear yard, a detached accessory building shall be located at least five feet from interior lot line.

(2) Signs are permitted as follows in accordance with the yard requirement of Section 153.024(B)(5).

(a) One Bulletin Board may be erected on each street frontage of any educational, religious, institutional, or similar use requiring announcement of its activities. The Bulletin Board shall not exceed twelve (12) square feet in surface area, nor fifteen (15) feet in height, and illumination, if any, shall be by constant light.

(b) One Identification Sign may be erected on each perimeter street frontage of a single-family detached subdivision, or permitted non- residential use. The sign shall not be permitted to exceed forty-eight (48) square feet of display surface area. The sign shall not exceed twelve (12) feet in height, and illumination, if any, shall be by constant light.

(c) During the period of construction, a temporary sign advertising the construction of improvements on the street premises, may be erected on each perimeter street frontage of the development. The sign shall not exceed forty (40) square feet in surface area, nor fifteen (15) feet in height, and illumination, if any, shall be by constant light.

(d) A temporary Real Estate Sign advertising the sale, rental, or lease of the premises may be erected on each street frontage of a lot. The sign shall not exceed four (4) square feet in surface area or

more than six (6) feet in height, and shall not be illuminated in any way.

(3) Private swimming pools (and all accessories thereto) shall meet safety requirements of State and local building codes.

(4) Child Care - In Home

(a) A maximum of four (4) non-related children may be cared for in the home without State Licensing. Five (5) to ten (10) children may be cared for in the home if the resident obtains a Special Exception and maintains continuous State Licensing. This number does not include those who reside in the residence.

(b) No person shall be employed other than a member of the immediate family residing on the premises or a substitute caregiver if the primary caregiver is unavailable.

(c) No signs advertising the Child Care Home shall be permitted on the lot.

(d) No exterior alteration of the dwelling or any customary accessory structure shall be made which would detract from the residential character of the structures.

(e) State-licensed child-care homes in existence on the effective date of this ordinance, but which would be prohibited by these requirements, may continue as otherwise regulated herein.

5) Yard sales shall occur only once a month for not more than three (3) consecutive days.

153.043 BULK AND AREA REQUIREMENTS -- R-1 or RS RESIDENTIAL SINGLE-FAMILY DETACHED DISTRICT

(A) Area: Every lot upon which a structure is hereafter erected shall front onto a dedicated street or public right-of-way, and shall conform to the following minimum lot area and width requirements.

(1) Residential Use:

(a) The lot area shall be a minimum of seven thousand (7000) square feet with a minimum width of seventy (70) feet (where sanitary sewers are available).

(b) Where no public sewers are available and disposal is by soil absorption, the minimum lot area shall be one (1) acre. The Posey County Health Department may require a larger lot.

(2) Non-Residential Use:

(a) The lot area shall be a minimum of ten thousand (10,000) square feet with a minimum width of one hundred (100) feet (where sanitary sewers are available).

(b) Where no public sanitary sewers are available and disposal is by soil absorption, minimum lot area shall be one (1) acre. The Posey County Health Department may require a larger lot.

(B) Yards:

(1) Front Yard and Street Side Yard:

(a) Every lot used for a single-family detached dwelling shall have a front yard (or street side yard) not less than twenty-five (25) feet in depth. The front yard (or street side yard) may be more or less than the 25-foot minimum depending on the predominant front yard (or street side yard) setback of existing structures along the blockface. If only one lot on the blockface is developed, the front yard (or street side yard) should be an average of the 25-foot setback and the existing structure setback. When the proposed structure falls between two developed lots, the front yard setback should be the average of the two abutting lot structure setbacks.

(b) Every lot used for a non-residential use shall have a front yard (or corner lot side yard) not less than twenty-five (25) feet in depth.

(c) If there is no dedicated roadway right-of-way, the front yard (or corner lot side yard) setback from the center of the roadway is twenty-five (25) feet plus one-half the right-of-way width of the applicable roadway functional class as if the roadway had been dedicated (adding 25 feet for a “local street,” 40 feet for a “collector” or “secondary arterial,” 60 feet for a “primary arterial,” and 75 feet for a “divided primary arterial”).

(2) Side Yards:

(a) Every lot used for a single-family detached dwelling shall have a side yard not less than five (5)

feet in depth.

(b) Every lot used for a non-residential use shall have a side yard not less than ten (10) feet in depth. However, when a non-residential use by right or Special Exception abuts a Residential or Office District, the minimum side yard requirement in the RS or R-1 District of 10 feet shall be increased by one foot for each foot of building height exceeding 18 feet, but the required side yard shall not exceed 25 feet.

(3) Rear Yard:

(a) Every lot used for a one-family dwelling shall have a rear yard not less than twenty-five (25) feet in depth.

(b) Every lot used for a non-residential use shall have a rear yard not less than ten (10) feet in depth. However, when a non-residential use by right or Special Exception abuts a Residential or Office District, the minimum rear yard requirement in the A District of 10 feet shall be increased by one foot for each foot of building height exceeding 18 feet, but the required rear yard shall not exceed 25 feet.

(C) Height: No building or structure or part thereof shall be erected or altered to a height exceeding two and one-half (2½) stories, or thirty-five (35) feet.

(D) Lot Coverage: The combined area occupied by all principal and accessory buildings shall not exceed thirty percent (30%) of the area of the lot.

(E) Minimum Floor Area: A one-family dwelling shall have a minimum livable floor area of nine hundred and fifty (950) square feet and shall be a minimum of twenty-three (23) feet wide.

(F) Floor Area Ratio: The floor area ratio shall not exceed 0.40.

(G) Dwelling Unit Density: The maximum number of dwelling units per acre is 6.223.

153.044 USE REGULATIONS – RT RESIDENTIAL TOWNHOUSE DISTRICT

(A) Use by Right. No building or structure, or part thereof, shall be erected, altered or used, or land used in whole or in part, for other than one or more of the following permitted principal uses:

(1) Use Unit 1 – Areawide Uses by Right
(2) Use Unit 5 – Single-Family Detached Dwelling
(3) Part Use Unit 6 – Single-Family Attached Dwelling – townhouses (only)
(4) Use Unit 8 – Manufactured or Modular Home Dwelling

(B) Use by Special Exception. Special Exception Uses may be permitted by the Board of Zoning Appeals following a public hearing, as indicated below, when such are deemed essential or desirable to the public convenience or welfare and are in harmony with the various elements or objectives of the Comprehensive Plan.

(1) Use Unit 2 – Areawide Special Exception Uses
(2) Use Unit 3 – Public Protection and Utility Facilities
(3) Use Unit 4 – Community Services [including protective shelters, residential treatment centers and transitional living centers, and including Children's Nursery/Day Care Center for more than 4 unrelated children (excluding those who live in the home)].
(4) Use Unit 28 – Home Occupations
(5) Use Unit 29-Mobile Office Trailer(as amended Mt.Vernon 5-16-13, Cynthiana 5-14-13, Poseyville 5-8-13, County 5-7-13)

(C) Accessory Uses Permitted. Accessory uses customarily incidental to a permitted principal use not involving the conduct of any business, trade, occupation or profession, are permitted as follows:

(1) Garage
(2) Carport
(3) Signs:
  (a) Bulletin Board
  (b) Identification Sign
  (c) Real Estate Sign
  (d) Construction Sign
(4) Shelter (storm)
(5) Private swimming pool
(6) Child care in Home (4 or less)
(7) Yard sales

(D) Accessory Use Conditions:

(1) General Conditions:

(a) An accessory building erected as an integral part of the principal building shall be made structurally a part thereof, shall have a common wall therewith, and shall comply with the requirements applicable to the principal building.

(b) A detached accessory building shall not be located in the front or side yard or encroach upon a minimum building setback line, but this limitation shall not apply to garages and carports, provided the minimum required front yard or side yard set back line is observed.

(c) Within the rear yard, a detached accessory building shall be located at least five feet from interior lot line.

(2) Signs are permitted as follows in accordance with the yard requirement of Section 153.024(B)(5).

(a) One Bulletin Board may be erected on each street frontage of any educational, religious, institutional, or similar use in Use Unit 4 by Special Exception requiring announcement of its activities. The Bulletin Board shall not exceed twelve (12) square feet in surface area, nor fifteen (15) feet in height, and illumination, if any, shall be by constant light.

(b) One Identification Sign may be erected on each perimeter street frontage of townhouse development, single-family detached subdivision, or permitted non- residential use. The sign shall not

be permitted to exceed forty-eight (48) square feet of display surface area. The sign shall not exceed twelve (12) feet in height, and illumination, if any, shall be by constant light.

(c) During the period of construction, a temporary sign advertising the construction of improvements on the street premises, may be erected on each perimeter street frontage of the development. The sign shall not exceed forty (40) square feet in surface area, nor fifteen (15) feet in height, and illumination, if any, shall be by constant light.

(d) A temporary Real Estate Sign advertising the sale, rental, or lease of the premises may be erected on each street frontage of a lot. The sign shall not exceed four (4) square feet in surface area, or more than six (6) feet in height, and shall not be illuminated in any way.

(3) Private swimming pools (and all accessories thereto) shall meet safety requirements of State and local building codes.

(4) Child Care - In Home

(a) A maximum of four (4) non-related children may be cared for in the home without State Licensing. Five (5) to ten (10) children may be cared for in the home if the resident obtains a Special Exception and maintains continuous State Licensing. This number does not include those who reside in the residence.

(b) No person shall be employed other than a member of the immediate family residing on the premises or a substitute caregiver if the primary caregiver is unavailable.

(c) No signs advertising the Child Care Home shall be permitted on the lot.

(d) No exterior alteration of the dwelling or any customary accessory structure shall be made which would detract from the residential character of the structures.

(e) State-licensed child-care homes in existence on the effective date of this ordinance, but which would be prohibited by these requirements, may continue as otherwise regulated herein.

(5) Yard sales shall occur only once a month for not more than three (3) consecutive days.

153.045 BULK AND AREA REQUIREMENTS -- RT RESIDENTIAL TOWNHOUSE DISTRICT

(A) Area:

Every lot upon which a structure is hereafter erected shall front onto a dedicated street or public right-of-way, and shall conform to the following minimum lot area and width requirements.

(1) Residential Use:

(a) The tract area shall be a minimum of seven thousand (7000) square feet with a minimum tract width of seventy (70) feet (where sanitary sewers are available) for single-family detached and single-family attached uses.

(b) It is assumed that there is a minimum of three townhouses per structure with a 70-foot tract width; thus, the minimum lot width is twenty (20) feet (with public sewers) for townhouses.

(c) Where no public sewers are available and disposal is by soil absorption, the minimum lot area shall be one (1) acre. The Posey County Health Department may require a larger lot.

(2) Non-Residential Use:

(a) The lot area shall be a minimum of ten thousand (10,000) square feet with a minimum width of one hundred (100) feet (where sanitary sewers are available).

(b) Where no sanitary sewers are available and disposal is by soil absorption, minimum lot area shall be one (1) acre. The Posey County Health Department may require a larger lot.

(B)Yards:

(1) Front Yard and Street Side Yard:

(a) Every lot or tract used for a single-family detached dwelling or single-family attached dwelling shall have a front yard (or street side yard) not less than twenty-five (25) feet in depth. The front yard or street side yard may be more or less than the 25-foot minimum depending on the predominant front yard (or street side yard) setback of existing structures along the blockface. If only one lot on the blockface is

developed, the front yard (or street side yard) should be an average of the 25-foot setback and the existing structure setback. When the proposed structure falls between two developed lots, the front yard setback should be the average of the two abutting lot structure setbacks.

(b) Every lot used for a non-residential use shall have a front yard (or corner lot side yard) not less than twenty-five (25) feet in depth.

(c) If the there is no dedicated roadway right-of-way, the front yard (or corner lot side yard) setback from the center of the roadway is twenty-five (25) feet plus one-half the right-of-way width of the applicable roadway functional class as if the roadway had been dedicated (adding 25 feet for a "local street," 40 feet for a "collector" or "secondary arterial," 60 feet for a "primary arterial," and 75 feet for a "divided primary arterial").

(2) Side Yards:

(a) Every lot used for a single-family detached dwelling shall have a side yard not less than five (5) feet in depth.

(b) Every lot used for a non-residential use shall have a side yard not less than ten (10) feet in depth. However, when a non-residential use by right or Special Exception abuts a Residential or Office District, the minimum side yard requirement in the RT District of 10 feet shall be increased by one foot for each foot of building height exceeding 18 feet, but the required side yard shall not exceed 25 feet.

(3) Rear Yard:

(a) Every lot used for a one-family dwelling (attached or detached) shall have a rear yard not less than twenty (20) feet in depth.

(b) Every lot used for a non-residential use shall have a rear yard not less than ten (10) feet in depth. However, when a non-residential use by right or Special Exception abuts a Residential or Office District, the minimum rear yard requirement in the RT District of 10 feet shall be increased by one foot for each foot of building height exceeding 18 feet, but the required rear yard shall not exceed 25 feet.

(C) Height: No building or structure or part thereof shall be erected or altered to a height exceeding two and one-half (2½) stories, or thirty-five (35) feet.

(D) Lot Coverage: The combined area occupied by all principal and accessory buildings shall not exceed thirty percent (30%) of the area of the lot.

(E) Minimum Floor Area:

(1) A single-family detached dwelling shall have a minimum livable floor area of nine hundred and fifty (950) square feet and shall be a minimum of twenty-three (23) feet wide.

(2) A single-family attached dwelling shall have a minimum livable floor area of six hundred and fifty (650) square feet and shall be a minimum dwelling unit width of twenty (20) feet wide.

(F) Floor Area Ratio: The floor area ratio shall not exceed 0.50.

(G)Dwelling Unit Density: The maximum number of dwelling units per acre is 12.446.

153.046 USE REGULATIONS -- R-2 RESIDENTIAL TWO-FAMILY DISTRICT

(A) Use by Right. No building or structure, or part thereof, shall be erected, altered or used, or land used, in the whole or in part, for other than one or more of the following permitted principal uses:

(1) Use Unit 1 – Areawide Uses by Right
(2) Use Unit 5 – Single-Family Detached Dwelling
(3) Use Unit 6 – Single-Family Attached Dwelling (townhouses, duplexes, zero lot-line, quadruplexes)
(4) Use Unit 8 – Manufactured or Modular Home Dwelling

(B) Use by Special Exception. Special Exception Uses may be permitted by the Board of Zoning Appeals following a public hearing, as indicated below, when such are deemed essential or desirable to the public convenience or welfare and are in harmony with the various elements or objectives of the Comprehensive Plan.

(1) Use Unit 2 – Areawide Special Exception Uses
(2) Use Unit 3 – Public Protection and Utility Facilities
(3) Use Unit 4 – Community Services [including protective shelters, residential treatment centers and transitional living centers, and including Children's Nursery/Day Care Center for more than 4 unrelated children (excluding those who live in the home)].
(4) Use Unit 28 – Home Occupations
(5) Use Unit 29-Mobile Office Trailer (as amended Mt.Vernon 5-16-13, Cynthiana 5-14-13, Poseyville 5-8-13, County 5-7-13)

(C) Accessory Uses Permitted. Accessory uses customarily incidental to a permitted principal use not involving the conduct of any business, trade, occupation or profession, are permitted as follows:

(1) Garage
(2) Carport
(3) Signs:
  (a) Bulletin Board
  (b) Identification Sign
  (c) Real Estate Sign
  (d) Construction Sign
(4) Shelter (storm)
(5) Private swimming pool
(6) Child care in Home (4 or less)
(7) Yard sales

(D) Accessory Use Conditions:

(1) General Conditions:

(a) An accessory building erected as an integral part of the principal building shall be made structurally a part thereof, shall have a common wall therewith, and shall comply with the requirements applicable to the principal building.

(b) A detached accessory building shall not be located in the front or side yard or encroach upon a minimum building setback line, but this limitation shall not apply to garages and carports, provided the minimum required front yard or side yard set back line is observed.

(c) Within the rear yard, a detached accessory building shall be located at least five feet from interior lot line.

(2) Signs are permitted as follows in accordance with the yard requirement of Section 153.024(B)(5).

(a) One Bulletin Board may be erected on each street frontage of any educational, religious, institutional, or similar use in Use Unit 4 by Special Exception requiring announcement of its activities. The Bulletin Board shall not exceed twelve (12) square feet in surface area, nor fifteen (15) feet in height, and illumination, if any, shall be by constant light.

(b) One Identification Sign may be erected on each perimeter street frontage of a single-family detached subdivision, townhouse development, duplex structure or quadruplex structure or permitted non-

residential use. The sign shall not be permitted to exceed forty-eight (48) square feet of display surface area. The sign shall not exceed twelve (12) feet in height, and illumination, if any, shall be by constant light.

(c) During the period of construction, a temporary sign advertising the construction of improvements on the street premises, may be erected on each perimeter street frontage of the development. The sign shall not exceed forty (40) square feet in surface area, nor fifteen (15) feet in height, and illumination, if any, shall be by constant light.

(d) A temporary Real Estate Sign advertising the sale, rental, or lease of the premises may be erected on each street frontage of a lot. The sign shall not exceed four (4) square feet in surface area, or more than six (6) feet in height and shall not be illuminated in any way.

(3) Private swimming pools (and all accessories thereto) shall meet safety requirements of State and local building codes.

(4) Child Care - In Home

(a) A maximum of four (4) non-related children may be cared for in the home without State Licensing. Five (5) to ten (10) children may be cared for in the home if the resident obtains a Special Exception and maintains continuous State Licensing. This number does not include those who reside in the residence.

(b) No person shall be employed other than a member of the immediate family residing on the premises or a substitute caregiver if the primary caregiver is unavailable.

(c) No signs advertising the Child Care Home shall be permitted on the lot.

(d) No exterior alteration of the dwelling or any customary accessory structure shall be made which would detract from the residential character of the structures.

(e) State-licensed child-care homes in existence on the effective date of this ordinance, but which would be prohibited by these requirements, may continue as otherwise regulated herein.

(5) Yard sales shall occur only once a month for not more than three (3) consecutive days.

153.047 BULK AND AREA REQUIREMENTS-- R-2 TWO-FAMILY RESIDENTIAL DISTRICT

(A) Area: Every lot upon which a structure is hereafter erected shall front onto a dedicated street or public right-of-way and shall conform to the following minimum lot area width requirements.

(1) Residential Use:

(a) The tract area shall be a minimum of seven thousand (7000) square feet with a minimum width of seventy (70) feet (where sanitary sewers are available) for single-family detached and single-family attached uses. For a quadruplex, (four units with two common walls), the minimum tract area is fourteen thousand (14,000) square feet (where sanitary sewers are available).

(b) It is assumed that there is a minimum of are three townhouses per structure with a 70-foot tract width; thus, the minimum lot width is twenty (20) feet (with public sewers) for townhouses. Therefore, the interior of the three townhouses has a minimum lot area of two thousand (2,000) square feet and the exterior townhouse lots are a minimum of two thousand five hundred (2,500) square feet (where sanitary sewers are available).

(c) It is assumed that there are two units per structure in a duplex with a 70-foot tract width; thus, the minimum lot width is thirty-five (35) feet (with public sewers) with one common wall for duplexes. Therefore, the minimum lot area is three thousand five hundred (3,500) square feet per dwelling unit (where sanitary sewers are available).

(d) It is assumed that there are four units per structure in a quadruplex with a 70-foot tract width; thus, the minimum lot width is twenty (35) feet (with public sewers) for a quadruplex with two common walls. Therefore, the minimum lot area is three thousand five hundred (3,500) square feet per dwelling unit (where sanitary sewers are available).

(e) Where no sanitary sewers are available and disposal is by soil absorption, the minimum lot area

shall be one (1) acre per single-family detached dwelling, and one (1) acre per duplex structure. The lot size for townhouse or quadruplex, structures shall not be less than one (1) acre, and the Posey County Health Department may require a larger lot size. For all residential uses, the Posey County Health Department may require a larger lot for any type of residential use.

(2) Non-Residential Use:

(a) The lot area shall be a minimum of ten thousand (10,000) square feet with a minimum width of one hundred (100) feet (where sanitary sewers are available).

(b) Where no sanitary sewers are available and disposal is by soil absorption, the minimum lot area shall be one (1) acre. The Posey County Health Department may require a larger lot.

(B) Yards:

(1) Front Yard and Street Side Yard:

(a) Every lot or tract used for a single-family detached dwelling or single-family attached dwelling shall have a front yard (or street side yard) not less than twenty-five (25) feet in depth. The front yard (or street side yard) may be more or less than the 25-foot minimum depending on the predominant front yard (or street side yard) setback of existing structures along the blockface. If only one lot on the blockface is developed, the front yard (or street side yard) should be an average of the 25-foot setback and the existing structure setback. When the proposed structure falls between two developed lots, the front yard setback should be the average of the two abutting lot structure setbacks.

(b) Every lot used for a non-residential use shall have a front yard (or corner lot side yard) not less than twenty-five (25) feet in depth.

(c) If the there is no dedicated roadway right-of-way, the front yard (or corner lot side yard) setback from the center of the roadway is twenty-five (25) feet plus one-half the right-of-way width of the applicable roadway functional class as if the roadway had been dedicated (adding 25 feet for a "local street," 40 feet for a "collector" or "secondary arterial," 60 feet for a "primary arterial," and 75 feet for a "divided primary arterial").

(2) Side Yard:

(a) Every lot used for a single-family detached dwelling or every tract used for a single-family attached structure shall have a side yard not less than five (5) feet in depth. The interior lot (or unit) of a townhouse structure with two common walls has no side yard requirement. The adjoining lots of a duplex with one common wall or adjoining lots of a zero lot-line development have no side yard requirement. The adjoining portion of lots of quadruplex structure with two common walls has no side year requirements.

(b) Every lot used for non-residential use shall have a side yard of not less than ten (10) feet in depth. However, when a non-residential use by right or Special Exception abuts a Residential or Office District, the minimum side yard requirement in the R-2 District of 10 feet shall be increased by one foot for each foot of building height exceeding 18 feet, but the required side yard shall not exceed 25 feet.

(3) Rear Yard:

(a) Every lot used for a residential use used for a one-family dwelling (attached or detached) shall have a rear yard of not less than twenty-five (25) feet in depth. For a quadruplex, the rear yard must be observed for the tract holding the quadruplex structure, but is not observed for the adjoining portion of lots where a common wall exists between abutting units.

(b) Every lot used for non-residential use shall have a rear yard of not less than ten (10) feet in depth. However, when a non-residential use by right or Special Exception abuts a Residential or Office District, the minimum rear yard requirement in the R-2 District of 10 feet shall be increased by one foot for each foot of building height exceeding 18 feet, but the required rear yard shall not exceed 25 feet.

(C) Height: No building or structure, or part thereof, shall be erected or altered to a height exceeding two and one-half (2½) stories or thirty-five (35) feet.

(D) Lot Coverage: The Combined area occupied by all principal and accessory buildings shall not exceed thirty percent (30%) of the area of the lot.

(E) Minimum Floor Area:

(1) The minimum livable floor area for a single-family detached dwelling unit shall be nine hundred

and fifty (950) square feet and a minimum of twenty-three (23) feet wide.

(2) The minimum livable floor area for a single-family attached dwelling (townhouse, duplex, zero lot-line or quadruplex) shall be six hundred and fifty (650) square feet per dwelling unit, total of one thousand nine hundred fifty (1,950) square feet for a townhouse structure (assuming three units), total one thousand three hundred (1,300) square feet per duplex structure (two units), total of six hundred and fifty (650) square feet per zero lot-line unit, and total of two thousand six hundred (2,600) square feet per quadruplex structure (four units).

(F) Floor Area Ratio: The floor area ratio shall not exceed 0.50.

(G) Dwelling Unit Density: The maximum number of dwelling units per acre is 12.446.

153.048 USE REGULATIONS-- RM or R-3 RESIDENTIAL MULTIPLE-FAMILY DISTRICT

(A) Use of Right. No building or structure, or part thereof, shall be erected, altered or used, or land used, in whole or in part, for other than one (1) or more of the following permitted principle uses:

(1) Use Unit 1 – Areawide Uses by Right

(2) Use Unit 5 – Single-Family Detached Dwelling

(3) Use Unit 6 – Single-Family Attached Dwelling (including townhouses, duplex, zero lot-line, quadruplexes)

(4) Use Unit 7 – Multiple Family Dwelling (including "group quarters" but excluding funeral homes, hotels and motels)

(5) Use Unit 8 – Manufactured or Modular Home Dwelling

(B) Use by Special Exception. Special Exception Uses may be permitted by the Board of Zoning Appeals following a public hearing, as indicated below, when such are deemed essential or desirable to the public convenience or welfare and are in harmony with the various elements or objectives of the Comprehensive Plan:

(1) Use Unit 2 – Areawide Special Exception Uses

(2) Use Unit 3 – Public Protection and Utility Facilities

(3) Use Unit 4 – Community Services [including protective shelters, residential treatment centers and transitional living centers; and including Children's Nursery/Day Care Center for more than 4 unrelated children (excluding those who live in the home)].

(4) Use Unit 10 – Off-Street Parking Areas

(5) Use Unit 11 – Offices and Studios

(6) Use Unit 28 – Home Occupations

(7) Use Unit 29-Mobile Office Trailer (as amended Mt.Vernon 5-16-13, Cynthiana 5-14-13, Poseyville 5-8-13, County 5-7-13)

(C) Accessory Uses Permitted. Accessory uses customarily incidental to a permitted principal use not involving the conduct of any business, trade, occupation or profession, are permitted as follows:

(1) Management office, private recreation, laundry, and storage facilities.

(2) Garage

(3) Carport

(4) Signs:

- (a) Bulletin Board
- (b) Identification Sign
- (c) Real Estate Sign
- (d) Construction Sign

(5) Shelter (storm)

(6) Private swimming pool

(7) Child care in Home (4 or less)

(8) Yard sales

(D) Accessory Use Conditions:

(1) General Conditions

(a) An accessory building erected as an integral part of the principal building shall be made structurally a part thereof, shall have a common wall therewith, and shall comply with the requirements applicable to the principal building.

(b) A detached accessory building shall not be located in the front or side yard or encroach upon a minimum building setback line, but this limitation shall not apply to garages and carports, provided the minimum required front yard or side yard set back line is observed.

(c) Within the rear yard, a detached accessory building shall be located at least five feet from interior lot line.

(2) Signs are permitted as follows in accordance with the yard requirement of Section 153.024(B)(5).

(a) One Bulletin Board may be erected on each street frontage of any educational, religious, institutional, or similar use in Use Unit 4 by Special Exception or other uses by Special Exception requiring announcement of its activities. The Bulletin Board shall not exceed twelve (12) square feet in surface area, nor fifteen (15) feet in height, and illumination, if any, shall be by constant light.

(b) One Identification Sign may be erected on each perimeter street frontage of a single-family detached subdivision, townhouse development, duplex structure, quadruplex development, multifamily-family development or permitted non- residential use. The sign shall not be permitted to exceed forty-eight (48) square feet of display surface area. The sign shall not exceed twelve (12) feet in height, and illumination, if any, shall be by constant light.

(c) During the period of construction, a temporary sign advertising the construction of improvements on the street premises, may be erected on each perimeter street frontage of the development. The sign shall not exceed forty (40) square feet in surface area, nor fifteen (15) feet in height, and illumination, if any, shall be by constant light.

(d) A temporary Real Estate Sign advertising the sale, rental, or lease of the premises may be erected on each street frontage of a lot. The sign shall not exceed eight (8) square feet in surface area, nor fifteen (15) feet in height, and illumination, if any, shall be by constant light.

(3) Private swimming pools (and all accessories thereto) shall meet safety requirements of State and local building codes.

(4) Child Care – In Home

(a) A maximum of four (4) non-related children may be cared for in the home without State Licensing. Five (5) to ten (10) children may be cared for in the home if the resident obtains a Special Exception and maintains continuous State Licensing. This number does not include those who reside in the residence.

(b) No person shall be employed other than a member of the immediate family residing on the premises or a substitute caregiver if the primary caregiver is unavailable.

(c) No signs advertising the Child Care Home shall be permitted on the lot.

(d) No exterior alteration of the dwelling or any customary accessory structure shall be made which would detract from the residential character of the structures.

(e) State-licensed child-care homes in existence on the effective date of this ordinance, but which would be prohibited by these requirements, may continue as otherwise regulated herein.

(5) Yard sales shall occur only once a month for not more than three (3) consecutive days.

153.049 BULK AND AREA REQUIREMENTS— RM or R-3 RESIDENTIAL MULTIPLE FAMILY –DISTRICT

(A) Area: Every lot upon which a structure is hereafter erected shall front onto a dedicated street or public right-of-way and shall conform to the following minimum lot area and width requirements:

(1) Residential Use:

(a) The tract area shall be a minimum of seven thousand (7000) square feet with a minimum tract width of seventy (70) feet (where sanitary sewers are available) for single-family detached and single-family attached uses. For a quadruplex, (four units with two common walls), the minimum tract area is fourteen thousand 14,000) square feet (where sanitary sewers are available). For multiple family uses and "group quarters" uses (Use Unit 7), the minimum tract area ten thousand (10,000) square feet with a minimum tract with of one hundred (100) feet (where sanitary sewers are available).

(b) It is assumed that there is a minimum of three townhouses per structure with a 70-foot tract width; thus, the minimum lot width is twenty (20) feet (with public sewers) for townhouses. Therefore, the interior of the three townhouses has a minimum lot area of two thousand (2,000) square feet and the exterior townhouse lots are a minimum of two thousand five hundred (2,500) square feet (where sanitary sewers are available).

(c) It is assumed that there are two units per structure in a duplex with a 70-foot tract width; thus, the minimum lot width is thirty-five (35) feet (with public sewers) with one common wall for duplexes. Therefore, the minimum lot area is three thousand five hundred (3,500) square feet per dwelling unit (where sanitary sewers are available).

(d) It is assumed that there are four units per structure in a quadruplex with a 70-foot tract width; thus, the minimum lot width is twenty (35) feet (with public sewers) for a quadruplex with two common walls. Therefore, the minimum lot area is three thousand five hundred (3,500) square feet per dwelling unit (where sanitary sewers are available).

(e) Where no sanitary sewers are available and disposal is by soil absorption, the minimum lot area shall be one (1) acre per single-family detached dwelling and one (1) acre per duplex structure. The lot size for townhouse, quadruplex, multi-family structures and "group quarters" (Use Unit 7) structures shall not be less than one (1) acre, and the Posey County Health Department may require a larger lot size. For all residential uses, the Posey County Health Department may require a larger lot for any type of residential use.

(2) Non-Residential Use:

(a) The lot area shall be at least ten thousand 10,000) square feet with a minimum width of one hundred (100) feet (where sanitary sewers are available).

(b) Where no sanitary sewers are available and disposal is by soil absorption, minimum lot of the area shall be one (1) acre. The Posey County Health Department may require a larger lot. .

(B) Yards:

(1) Front Yard and Street Side Yard:

(a) Every lot or tract for single-family detached dwelling, townhouse structure, single-family attached structure, multiple family structure and "group quarters" structure (Use Group 7), shall have a front yard (or street side yard) not less than twenty-five (25) feet in depth. The front yard (or street side yard) may be more or less than the 25-foot minimum depending on the predominant front yard (or street side yard) setback of existing structures along the blockface. If only one lot on the blockface is developed, the front yard (or street side yard) should be an average of the 25-foot setback and the existing structure setback. When the proposed structure falls between two developed lots, the front yard setback should be the average of the two abutting lot structure setbacks.

(b) Every lot used for a non-residential use shall have a front yard (or corner lot side yard) not less than twenty-five (25) feet in depth.

(c) If the there is no dedicated roadway right-of-way, the front yard (or corner lot side yard) setback from the center of the roadway is twenty-five (25) feet plus one-half the right-of-way width of the applicable roadway functional class as if the roadway had been dedicated (adding 25 feet for a "local street," 40 feet for a "collector" or "secondary arterial," 60 feet for a "primary arterial," and 75 feet for a "divided primary arterial").

(2) Side Yard:

(a) Every lot used for a single-family detached dwelling or every tract used for a single-family attached structure shall have a side yard not less than five (5) feet in depth. The interior lot (or unit) of a townhouse structure with two common walls has no side yard requirement. The adjoining lots of a duplex with one common wall or adjoining lots of a zero lot-line development have no side yard requirement. The adjoining portion of lots of quadruplex structure with two common walls has no side year requirements.

(b) Every lot used for non-residential use shall have a side yard of not less than ten (10) feet in depth. However, when a non-residential use by right or Special Exception abuts a Residential or Office District, the minimum side yard requirement in the R-2, RM or R-3 District of 10 feet shall be increased by one foot for each foot of building height exceeding 18 feet, but the required side yard shall not exceed 25 feet.

(3) Rear Yard:

(a) Every lot or tract for a residential use shall have a rear yard of not less than twenty (20) feet in depth. For a quadruplex, the rear yard must be observed for the tract holding the quadruplex structure, but

is not observed for the adjoining portion of lots where a common wall exists between abutting units.

(b) Every lot used for a non-residential use shall have a rear yard of not less than ten (10) feet in depth. However, when a non-residential use by right or Special Exception abuts a Residential or Office District, the minimum rear yard requirement in the RM or R-3 District of 10 feet shall be increased by one foot for each foot of building height exceeding 18 feet, but the required rear yard shall not exceed 25 feet.

(C) Height: No building or structure, or part thereof, shall be erected or altered to a height exceeding four (4) stories, said four (4) stories not to exceed fifty (50) feet.

(D) Lot Coverage: The combined area occupied by all principal and accessory buildings shall not exceed fifty percent (50%) of the area of the lot.

(E) Minimum Floor Area:

(1) Minimum livable floor area for a single-family detached dwelling unit shall be nine hundred and fifty (950) square feet and a minimum of twenty-three (23) feet wide.

(2) Minimum livable floor area for a single-family attached (townhouse, duplex, zero lot-line or quadruplex) shall be six hundred and fifty (650) square feet per dwelling unit, total of one thousand nine hundred fifty (1,950) square feet for a townhouse structure (assuming three units), total one thousand three hundred (1300) square feet per duplex structure (two units),total of six hundred and fifty (650) square feet per zero lot-line unit, and total of two thousand six hundred (2,600) square feet per quadruplex structure (four units).

(3) Minimum livable floor area for a multiple-family dwelling shall be four hundred (400) square feet for an efficiency apartment, five hundred (500) square feet for a one-bedroom apartment, six hundred (600) square feet for a two-bedroom apartment, and seven hundred (700) for a three-bedroom apartment.

(F) Minimum Lot Area Per Dwelling: The minimum lot area per dwelling unit shall be one thousand five hundred (1,500) square feet for multiple family uses and other residential uses in the Use Group 7 containing multiple dwelling units.

(G) Floor Area Ratio: The floor area ratio shall not exceed 0.50.

(H) Dwelling Unit Density: The maximum number of dwelling units per acre is 29.04.

153.050 SITE DEVELOPMENT PLAN REVIEW AND APPROVAL: MULTIFAMILY COMPLEXES OVER EIGHT UNITS

(A) Purpose: By reason of potential adverse effects on public services or to neighboring land uses, site plan review and approval is required for all proposed multifamily complexes over eight units. This for the purposes of assuring proper accessibility, circulation, functional relationships of uses, and compatibility with adjoining and nearby development. No building permit shall be issued nor use commenced on a site approved for these uses except in accordance with a site development plan submitted to and approved by the Area Plan Commission in accordance with Section 153.223.

153.051 USE REGULATIONS–RMH RESIDENTIAL MOBILE HOME DISTRICT

(A) Use of Right. No building or structure, or part thereof, shall be erected, altered or used, or land or water used, in whole or part, for other than one (1) or more of the following principle permitted uses:

(1) Use Unit 1 – Areawide Uses by Right

(2) Use Unit 9 – Mobile Home Dwelling.

(B) Use by Special Exception. Special Exception Uses may be permitted by the Board of Zoning Appeals following a public hearing, as indicated below, when such are deemed essential or desirable to the public convenience or welfare and are in harmony with the various elements or objectives of the Comprehensive Plan:

(1) Use Unit 2 – Areawide Special Exception Uses

(2) Use Unit 3 – Public Protection and Utility Facilities

(3) Use Unit 4 – Community Services [excluding protective shelters, residential treatment centers and transitional living centers, and including Children's Nursery/Day Care Center for more than 4 unrelated children (excluding those who live in the home)].

(4) Use Unit 8 – Manufactured or Modular Dwelling

(5) Use Unit 28 – Home Occupations

(6) Use Unit 29 - Mobile Office Trailer (as amended Mt.Vernon 5-16-13, Cynthiana 5-14-13, Poseyville 5-8-13, County 5-7-13)

(C) Accessory Uses Permitted. Accessory uses customarily incidental to a permitted principal use not involving the conduct of any business, trade, occupation or profession, are permitted as follows:

(1) Management office, laundry and storage facilities

(2) Indoor or outdoor recreation areas

(3) Commercial uses supplying essential goods or services for the use of park occupants

(4) Garage

(5) Carport

(6) Signs:

(a) Bulletin Board

(b) Identification Sign

(c) Real Estate Sign

(d) Construction Sign

(7) Shelter (storm)

(8) Private swimming pool

(9) Child care in Home (4 or less)

(10) Yard sales

(D) Accessory Use Conditions:

(1) Indoor or outdoor recreation areas not be less than eight percent (8%) of the gross site area.

(2) Commercial uses supplying essential goods or services for the use of park occupants, shall be subject to the following restrictions.

(a) Such establishments and the parking areas primarily related to their operations shall not occupy more than ten percent (10%) of the total area of the park;

(b) Shall be subordinate to the residential use and character of the park;

(c) Shall be located and designed and intended to serve convenient trade or service needs of persons residing in the park;

(d) Shall present no visible evidence of their commercial nature to areas outside the park.

(3) General Conditions:

(a) An accessory building erected as an integral part of the principal building shall be made structurally a part thereof, shall have a common wall therewith, and shall comply with the requirements applicable to the principal building.

(b) A detached accessory building shall not be located in the front or side yard or encroach upon a minimum building setback line, but this limitation shall not apply to garages and carports, provided the minimum required front yard or side yard set back line is observed.

(c) Within the rear yard, a detached accessory building shall be located at least five feet from interior lot line.

(4) Signs are permitted as follows in accordance with the yard requirement of Section 153.024(B)(5).

(a) One Bulletin Board may be erected on each street frontage of any educational, religious, institutional, or similar use in Use Unit 4 by Special Exception requiring announcement of its activities. The Bulletin Board shall not exceed twelve (12) square feet in surface area, nor fifteen (15) feet in height, and illumination, if any, shall be by constant light.

(b) One Identification Sign may be erected on each perimeter street frontage of a mobile home park or subdivision. The sign shall not be permitted to exceed forty-eight (48) square feet of display surface area. The sign shall not exceed twelve (12) feet in height, and illumination, if any, shall be by constant light.

(c) During the period of construction, a temporary sign advertising the construction of improvements on the street premises, may be erected on each perimeter street frontage of the development. The sign shall not exceed forty (40) square feet in surface area, nor fifteen (15) feet in height, and illumination, if any, shall be by constant light.

(d) A temporary Real Estate Sign advertising the sale, rental, or lease of the premises may be erected on each street frontage of a lot. The sign shall not exceed twelve (12) square feet in surface area (total of all sides), nor six (6) feet in height, and illumination, if any, shall be by constant light.

(5) Private swimming pools (and all accessories thereto) shall meet safety requirements of State and local building codes.

(6) Child Care – In Home

(a) A maximum of four (4) non-related children may be cared for in the home without State Licensing. Five (5) to ten (10) children may be cared for in the home if the resident obtains a Special Exception and maintains continuous State Licensing. This number does not include those who reside in the residence.

(b) No person shall be employed other than a member of the immediate family residing on the premises or a substitute caregiver if the primary caregiver is unavailable.

(c) No signs advertising the Child Care Home shall be permitted on the lot.

(d) No exterior alteration of the dwelling or any customary accessory structure shall be made which would detract from the residential character of the structures.

(e) State-licensed child-care homes in existence on the effective date of this ordinance, but which would be prohibited by these requirements, may continue as otherwise regulated herein.

(7) Yard sales shall occur only once a month for not more than three (3) consecutive days.

153.052 BULK AND AREA REQUIREMENTS— RMH RESIDENTIAL MOBILE HOME DISRICT

(A) Area: Every lot upon which a structure is hereafter erected shall front onto a dedicated street or public right-of-way and shall conform to the following minimum lot area and width requirements:

(1) Residential Use:

(a) The tract area planned for a mobile home park shall be a minimum of five (5) gross acres with a minimum tract width of one hundred (100) feet, and shall be served by sanitary sewers. Additionally, a subdivision plat incorporating these requirements and any additional requirements which result from the subdivision process, must be submitted to and approved by the Plan Commission and filed of record in the Office of the Posey County Recorder.

(b) The lot area for a mobile home shall be a minimum of six-thousand four-hundred forty (6,440) square feet with a minimum with a minimum lot width of fifty-six (56) feet.

(c) No mobile home site shall be leased in any mobile home park for less than thirty (30) days.

(2) Non-Residential Use:

(a) The lot area shall be at least ten thousand 10,000) square feet with a minimum width of one hundred (100) feet (where sanitary sewers are available).

(B) Yards:

(1) Front Yard and Street Side Yard:

(a) Every tract of the mobile home park or manufactured/modular subdivision shall have a front yard (or street side yard) of twenty-five (25) feet.

(b) Every lot for single-family detached dwellings shall have a front yard not less than twenty (20) feet in depth and street side yard not less than ten (10) feet.

(c) Every lot used for a non-residential use shall have a front yard (or street side yard) not less than twenty-five (25) feet in depth.

(d) If there is no dedicated roadway right-of-way, the front yard (or corner lot side yard) setback of the tract from the center of the roadway is twenty-five (25) feet plus one-half the right-of-way width of the applicable roadway functional class as if the roadway had been dedicated (adding 25 feet for a "local street," 40 feet for a "collector" or "secondary arterial," 60 feet for a "primary arterial," and 75 feet for a "divided primary arterial").

(2) Side Yard:

(a) Every tract of the mobile home park or manufactured/modular subdivision shall have a side yard not less than twenty-five (25) feet.

(b) Every lot used for a single-family detached dwelling shall have a side yard not less than five (5) feet in depth.

(c) Every lot used for non-residential use shall have a side yard of not less than twenty-five (25) feet.

(3) Rear Yard:

(a) Every tract of the mobile home park or manufactured/modular subdivision shall have a rear yard of twenty-five (25) feet.

(b) Every lot for single-family detached dwelling shall have a rear yard not less than ten (10) feet in depth.

(c) Unattached buildings of accessory uses may be located in the rear yard but shall be setback at least five (5) feet from the rear property line or outside any utility easement, whichever is greater.

(d) Every lot used for a non-residential use shall have a rear yard not less than twenty-five (25) feet in depth.

(C) Height: No building or structure, or part thereof, shall be erected or altered to a height exceeding one (1) story, not to exceed thirty-five (35) feet.

(D) Lot Coverage: The combined area occupied by all principal and accessory buildings shall not exceed thirty percent (30%) of the area of the lot.

(E) Minimum Floor Area: Minimum livable floor area for a single-family detached dwelling unit shall be six hundred and fifty (650) square feet.

(F) Minimum Livability Area Per Dwelling: The minimum livability area for recreation areas shall be three hundred (300) square feet per dwelling unit. This shall be provided in common areas of not less than 7500 square feet, located so as to be conveniently accessible to the mobile, manufactured or modular homes served. The area shall be of appropriate shape and terrain for active recreational uses, but shall not include any portion of an individual mobile, manufactured or modular home site or lot.

153.053 TRACK DEVELOPMENT STANDARDS — RMH RESIDENTIAL MOBILE HOME DISRICT

(A) Stages: The tract may be developed in two or more stages, provided that said stages conform in all respects with the approved mobile home park design and are developed within the prescribed period of

time.

(B) Fronting: Each mobile home lot shall front onto a paved internal street of a minimum for twenty (20) feet with a minimum right-of-way width of forty (40) feet.

(C) Pad and Skirting: Each mobile home lot shall be provided with a pad consisting of either a solid concrete slab or other adequate concrete supports of a thickness and size adequate to support the maximum anticipated loads during all seasons. When concrete ribbons are used, the area between he ribbons shall be filled with a layer of crushed rock or asphalt. Each concrete pad shall be provided with a minimum of six (6) anchor rings for each mobile home. Each mobile home unit shall have the undercarriage completely enclosed by skirting.

(D) Paved Outdoor Living Area: Each mobile home lot shall be provided with a suitable paved outdoor living area of a minimum of one hundred (100) square feet with a minimum width of ten (10) feet. This area shall be covered with a roof, subject to limitations imposed by the lot coverage maximum of thirty percent (30%). Parking areas and driveways shall not be included as part of this outdoor living space.

(E) Landscaping:

(1) Lawn and ground cover shall be provided where needed to prevent erosion of swales, slopes and other areas to obtain useable yards.

(2) Lawn and ground cover shall be appropriate for the use and location.

(F) Lot markers: The boundaries of each mobile home lot shall be permanently and visibly marked on the ground by flush stakes, markers, or other suitable means approved by the Area Plan Commission. Each mobile home site shall be numbered.

(G) Storage: Each mobile home park shall have a central storage structure available for use by all residents of the park or individual storage structures on each mobile home site. The storage structures, whether individual or central shall be waterproof. Each individual storage structure shall contain a minimum of ninety (90) cubic feet. Central waterproof structures shall provide ninety (90) cubic feet of space for each mobile home lot that they serve.

(H) Water and Sewage: Each mobile home site shall be connected with a municipal water and sewer system if such systems are adjacent to the park site or within one hundred fifty (150) feet.

(I) Utilities: All interior utility lines, including, but not limited to, gas, electric, communications, street lighting, and cable television, shall be placed underground. Individual antennas for televisions may be installed on each mobile home site but centralized antennas shall be encouraged.

(J) Common Walks: Common walks at least three (3) feet in width shall be provided in locations where pedestrian traffic is concentrated; for example to the entrance and to the office and other important facilities. No required walk shall be used as a drainage way.

(K) Street:

(1) Access to the mobile home park shall be free from a public street.

(2) The number and location of access streets shall be controlled for traffic safety and protection of surrounding properties.

(3) No mobile home site, recreation area, or service facility shall be designed for direct access to a street outside the boundaries of the mobile home park.

(4) All streets within the mobile home park shall have a minimum right-of-way width of forty (40) feet, and shall be surfaced according to the standards adopted by location jurisdictions.

(5) In the event streets are not dedicated, the mobile home park owner shall, prior to final approval, provide written certification that lease or rental agreements contain regulations to prohibit street parking in such a manner that impedes the movement of emergency vehicles.

(L) Grading and Drainage: Prior to construction, the drainage plan shall be submitted to the City (or Town) Engineer and the Street and Sewer Commissioner for approval or the County Highway Engineer (or County Commissioners) and the County Surveyor (or County Commissioners) for approval.

(1) The mobile home park shall be graded and drained giving due consideration to the protection of the proposed development from inundation of flood hazard from an adjacent water course and to provide for

the safe conveyance of storm waters, both those originating outside and inside the proposed park.

(2) This to be carried out through the development of facilities of sufficient capacity to permit ultimate development of the upstream tributary areas, and to allow discharge of storm waters originating within the park and/or conveyed through the park, on to downstream adjacent lands, to return to predevelopment flow conditions as closely as possible.

(3) This does not imply that the developer make extensive or reasonable improvement of existing inadequate drainage facilities on adjoining properties other than those necessary for satisfactory operation of the drainage facilities in the proposed development.

(M) Signs: See Section 153.051(D)(4) above.

(N) Illumination of Parks: All mobile home parks shall be furnished with lighting units spaced and equipped with luminaries placed at such heights and at such locations within the park to provide safe movement of pedestrians and vehicles. Lights shall be located at all entrances and exits. Said illumination shall be by constant light and be so arranged as to direct the light within the boundaries of the park.

(O) Fire Protection: The mobile home park shall meet the standards for adequate fire protection established by the National Fire Protection Association NFPA No. 501A and all amendments thereto. No open fires shall be permitted at any time or place within the mobile home park.

(P) Trash and Refuse Storage and Collection:

(1) All refuse shall be stored in fly-tight, watertight, rodent proof containers, which shall be located no more than one hundred fifty (150) feet from any mobile home site. Containers shall be provided in sufficient number and capacity to properly store all refuse. Refuse collection stands shall be so designed to prevent containers from being tipped, this is to minimize spillage, container deterioration, and to facilitate cleaning around them.

(2) Refuse, when not collected by a municipally sponsored service, shall be collected at least once a week. Where suitable collection service is not available from municipal or private agencies, the mobile home park operator shall dispose of the refuse by incineration or transporting refuse to a disposal site outside of the park area. Incinerators shall be authorized and operation if there is no conflict resulting with other statutes, ordinance or regulation. Authorized refuse incinerators shall be constructed in accordance with specifications of the Indiana State Health Department. Incinerators shall be operated only when attended by a person specifically authorized by the mobile home park owner or operator.

(Q) Location of Buildings and Structures within Mobile Home Parks: The location of buildings and structures within a mobile home park shall be subject to the following regulations:

(1) Permitted buildings or structures which are not located upon a mobile home site shall be located at least ten (10) feet from any mobile home site line.

(2) Swimming pools (their related facilities) and all other recreational areas shall be located at least one hundred (100) feet within the boundary of the mobile home park.

(3) One dwelling unit, other than a mobile home, may upon approval of the Area Plan Commission, be constructed for the owner or operator to reside.

(R) Abandonment and Expiration: In the event a mobile home park is abandoned for a period of one (1) year, or if upon expiration of three (3) years from the adoption of this ordinance the mobile home park has not been substantially completed, as determined by the Area Plan Commission, the land shall be rezoned by the Area Plan Commission. Rezoning would return the land in question to its previous zoning classification and may occur only after proper zoning application has been filed by the Commission. The Commission may, upon good cause, grant one (1) extension for a period of one (1) year upon application and public notice as required by law. Such application for extension shall be filed with the Commission six (6) months prior to the expiration of the aforesaid three (3) year period.

153.054 SITE PLAN REVIEW AND APPROVAL OF MOBILE HOME PARKS

(A) Overview: No mobile home shall be located or altered, or land used, nor shall any use permit be issued thereof, unless and until the RMH District and necessary mobile home park plans are officially approved by the

Area Plan Commissioner. All mobile homes shall be located and maintained in full conformity with the mobile home park site plans as approved for each RMH District. In addition to compliance with the requirements set forth here in and in conformity with all applicable ordinances and laws of the State of Indiana, each mobile home park shall also meet the requirements provided by the Indiana Mobile Home Parks Act of 1955 and all amendments thereto; and the Indiana State Board of Health Regulations and all amendments thereto.

(B) Preliminary Site Plan: A person desiring the approval of a mobile home park shall submit to the Area Plan Commission a preliminary site plan. The preliminary site plan shall be drawn at a scale of not less than one hundred (100) feet to one (1) inch on a sheet twenty-four (24) by thirty-six (36) inches, except that, when the drawing at that scale requires more than two (2) sheets, the site plan may then be drawn at a scale of two hundred (200) feet to one (1) inch; and shall contain the following information:

(1) Description:

(a) Proposed name of the mobile home park.

(b) A legal description showing the park location.

(c) Name and address of property owners.

(d) Graphic scale, north point and date.

(2) Existing Conditions:

(a) Boundary line of proposed park indicated by solid heavy line.

(b) Location, width and names of all existing streets or other public ways, railroads and utility rights-of-way, permanent buildings or structures, sections and municipal corporation lines within or adjacent to the tract.

(c) Location of existing sewers, water mains, culverts or other underground facilities, indicating pipe sizes and grades, within and adjoining to the proposed park.

(d) Boundary lines of adjacent land, showing adjoining streets, easements and owner's name.

(e) Existing and proposed topography, contour interval not to exceed five (5) feet, except where such interval is impractical.

(f) In the case of a revised site plan, all descriptive lines of the original site plan being vacated shall be shown by dotted lines in their proper position in relation to the new arrangement of the plan, the new site plan being clearly shown in solid lines so as to avoid ambiguity and confusion.

(3) Proposed Conditions:

(a) Layout of streets, their names and width and also the width of alleys, walkways and easements.

(i) The names of streets shall conform as far as practicable to names of corresponding streets existing in the vicinity of the mobile home park.

(ii) The name of a new street, not an extension or correspondence to an existing street, shall not duplicate or be similar to that of any existing street in the City, Town, or County.

(b) The location of all ingress and egress points with their corresponding dimensions.

(c) Layout, dimensions and number of mobile home sites.

(d) Parcels of land to be dedicated or reserved for public use.

(e) Building setback lines showing dimensions for the tract and all lots.

(f) Location site of recreational areas, commercial, and service facilities, parking areas, other structures, driveways, landscaping, street lights, fire hydrants, signs and sewer, water and storm drain facilities within the park.

(C) Approval of the Preliminary Site Plan:

(1) A public hearing shall be held in accordance with the administrative rules of the Area Plan Commission.

(2) Plan Commission Action: After the public hearing, the Area Plan Commission may give its approval to the preliminary site plan. Such approval shall be governed by the following qualifications:

(a) The approval of a preliminary site plan by the Area Plan Commission indicates the general acceptability of the layout as submitted.

(b) The Area Plan Commission may introduce such changes or revisions as deemed necessary in the

interests and needs of the community.

(c) Preliminary approval shall be effective for a maximum period of three (3) months. The Area Plan Commission may, provided good cause is shown and upon application, grant one (1) extension for a period of thirty (30) days; such application for extension shall be filed with the Plan Commission ten (10) days prior to the expiration of the aforesaid three (3) month period. If the final site plan has not been approved within this time, the preliminary site plan must again be submitted to the Plan Commission for approval.

(d) Any person feeling himself aggrieved by any action of the Area Plan Commission upon any proposed site plan, may apply in writing to the Area Plan Commission prior to its next meeting for modification of such action.

(e) If the Area Plan Commission disapproves the site plan, it shall set forth its reasons in its own records and provide the applicant with a copy.

(D) Approval of Final Site Plan: After the approval of the preliminary site plan by the Area Plan Commission and the fulfillment of the requirements of these regulations:

(1) The final site plan must be submitted in the form of an original tracing with waterproof ink on standard tracing cloth or approved equivalent and three (3) prints thereof, shall be submitted to the Commission. The final site plan so submitted may include the entire area of the preliminary site plan as approved or such portions of it which shall provide consecutive development units. The final site plan shall be prepared at the same scale as the preliminary site plan as approved or such portions of it which will provide consecutive development units, and shall contain that information provided in the preliminary site plan. All final site plans shall be prepared by a registered engineer or land surveyor duly registered to practice in the State of Indiana with his seal affixed thereto and must have certification endorsed thereon, by the City (or Town) Engineer and the City (or Town) Street and Sewer Commissioner or County Highway Engineer (or County Commissioners) and the County Surveyor (or County Commissioners) that all streets, sidewalks, curbs, gutters, sanitary and storm drainage facilities meet current City, Town or County standards as to such facilities.

(2) The final site plan shall be acted upon at the first meeting of the Area Plan Commission following its submission, provided such plan has previously received preliminary approval, and provided the final site plan is submitted to the Director of the Area Plan Commission not less than seventy-two (72) hours prior to such meeting. If the Area Plan Commission approves the final site plan, it shall affix the Commission's seal upon the site plan together with the certifying signature of its President and Secretary.

(3) If the Area Plan Commission disapproves the final site plan, it shall set forth its reasons in its own records and provide the applicant with a copy.

(4) Upon approval of the final site plan by the Area Plan Commission, the applicant shall pay the designated fee by check or money order payable to the Area Plan Commission.

(5) All final site plans shall be recorded in the Office of the Recorder of Posey County, Indiana.

Final site plan approval shall not become effective for the purposes of recording the site plan or action by the applicable local legislative body on the acceptance of streets until the Executive Director executes the site plan release.

(E) Site Plan Release: The Executive Director shall execute the site plan release upon certification by the appropriate local legislative body that is has received and has approved one of the following:

(1) A certificate submitted by the property owner and approved by the City (or Town) Engineer and the City/Town Street and Sewer Commissioner or by the County Highway Engineer (or County Commissioners) and the County Surveyor (or County Commissioners) stating that all improvements and installations in the mobile home park required for its approval have been made or installed in accordance with the requirements of this Ordinance, or:

(2) A bond which shall:

(a) Run to the local legislative body.

(b) Be in the amount to complete the improvements and installations in compliance with the Ordinance.

(c) Be with surety satisfactory to the local legislative body, and

(d) Specify the time for completion of the improvements and installations.

(3) Or, in the event the property owner has not received the certificate from local legislative body that said improvements and installations to the mobile home park have been made, and in the event said property owner elects not to furnish the bond required in (b) immediately preceding this subsection, then the Executive Director of the Commission may execute the plat release if he finds that all other matters comply with the general requirements of this Ordinance, and shall cause to be stamped or printed on said plat the following:

"Street, road and other minimum improvements have not been made and the public is notified that the City, Town or County will not accept the same for maintenance until owners of the various lots herein improve the same up to said minimum standards."

(E) Final Site Plan Forms: The following forms shall be used in the final site plan:

(1) Certificate:

UNDER AUTHORITY PROVIDED BY ORDINANCE ADOPTED BY THE APPLICABLE LOCAL LEGISLATIVE BODY IN POSEY COUNTY, INDIANA. THIS SITE PLAN WAS GIVEN FINAL APPROVAL BY THE AREA PLAN COMMISSION OF POSEY COUNTY AS FOLLOWS: Approved by the Area Plan Commission of Posey County at a meeting held_____. President Secretary
Date Plat Release

(2) Engineer's Certificate:

I, _____, hereby certify that I am a professional engineer/land surveyor licensed in compliance with the laws of the State of Indiana; that the site plan correctly represents a survey completed by me on insert date; that all monuments shown thereon actually exist; and that their location, size, type and material are accurately shown.

SEAL AND
NUMBER Signature

(3) Owner's Certificate (Dedication):

The undersigned (names), owner(s) of the real estate shown and described herein, do hereby certify that I (we) have laid off and platted, and do hereby lay off and plat said real estate in accordance with the site plan. The mobile home park shall be known and designated as (name). All streets and alleys shown and not heretofore dedicated, are hereby dedicated to the public. Front and side yard building setback lines are hereby established as shown on the plat; between which lines and the property lines of the streets, there shall be erected or maintained no buildings or structure or mobile homes. There are strips of land (number) feet in width shown on this plat and marked easements reserved for the use of public utilities for the installation of water, sewer mains, poles, ducts, lines and wires, subject at all times to the proper authorities and to the easement herein reserved. No structures, buildings or mobile homes are to be erected or maintained upon said strips of land. (Additional dedications and protective covenants, or private restrictions, would be inserted here upon the property owner's initiative.)

Signature

(4) Owner's Certificate (No Dedication):

If said mobile home park site plan contains no dedication to the public, streets or utilities; or should it be contemplated that the facilities of the applicable local jurisdiction shall not be used for maintenance of streets and sidewalks, then such owner shall be required to record with such mobile home site plan, a covenant that he will maintain said streets and sidewalks in compliance with the minimum standards as established by the applicable local jurisdiction, and that should he fail to maintain such standards in any of these respects, the applicable local jurisdiction may, after ten (10) days notice to such owners, effect all the necessary repairs or improvements as required to maintain said minimum standards, and the cost of all these and said necessary repairs or improvements shall become a lien against said real estate; and enforced and recorded as mechanic's liens are enforced and recorded, against such real estate; and said covenant shall contain the following provision:

That (name), being the owner(s) of the real estate contained in the above attached mobile home park site plan do hereby consent that if they or their assignees, heirs or those holding or owning said land through said owner(s) fail to maintain the streets and sidewalks according to and in compliance with the minimum standards for the maintenance of streets and sidewalks established by the applicable local jurisdiction, that after ten (10) days notice in writing to the owner of said real estate as shown upon the tax records in the Treasurer's Office of Posey County and at the address shown thereon, then said owner, assignees, heirs and those holding or owning through said owner(s) hereby authorize the applicable local jurisdiction to make all necessary repairs and perform all necessary maintenance and further authorize said applicable local jurisdiction to file a mechanic's lien against said real estate and enforce said lien pursuant to applicable laws.

153.060 PUD – PLANNED UNIT DEVELOPMENT DISTRICT

Planned Unit Development is an alternative to conventional development where the particular tract is under common ownership or control, and a detailed plan (Outline Development Plan) for the development of the tract, as a unit, is proposed and submitted for public review. A prerequisite for PUD development is the approval of a supplemental zoning district classification by the Area Plan Commission and the appropriate local legislative body.

153.061 PURPOSES – PUD – PLANNED UNIT DEVELOPMENT DISTRICT

(A) Purposes of PUD: The purposes of the Planned Unit Development are to:

(1) Permit innovative land development while maintaining appropriate limitation of the character and intensity of use and assuring compatibility with adjoining and nearby properties;

(2) Permit flexibility within the development to best utilize the unique physical features of the particular site;

(3) Provide and preserve meaningful open space;

(4) Achieve a continuity of function and design within the development.

(B) Purposes of PUD Provisions: The purpose of this Section is to permit such flexibility and provide performance criteria which can result in planned developments which produce:

(1) A maximum choice in the types of environment and living units available to the public.

(2) Open space and recreation areas.

(3) A pattern of development which preserves trees, outstanding topography and geological features and prevents soil erosion.

(4) A creative approach to the use of land and related physical developments.

(5) An effective use of land resulting in smaller networks of utilities and streets, and thereby lower housing costs.

(6) An environment of stable character in harmony with surrounding development.

(7) A more desirable environment than would be possible, through the strict application of other Sections of this Ordinance.

153.062 GENERAL PROVISIONS – PUD – PLANNED UNIT DEVELOPMENT DISTRICT

Planned Unit Development is permitted on tracts having the district designation PUD. In every instance, the PUD is to be reviewed as to the proposed location and character of the uses and the unified treatment of the development of the tract. The regulations of the general zoning district or districts remain applicable except as specifically modified pursuant to the provisions of this chapter. No modification of use or bulk and area requirement of the applicable general use district or districts shall be permitted unless a subdivision plat incorporating the provisions and requirements of this chapter is submitted to and approved by the Area Plan Commission and filed of record in the office of the Posey County Recorder. Further, all PUDs shall be served by adequate publically dedicated roadways, public sanitary sewers and public potable water system, and shall provide adequate stormwater retention and site stormwater drainage.

153.063 USES PERMITTED IN PLANNED UNIT DEVELOPMENT

(A) Use of Right. No building or structure, or part thereof, shall be erected, altered or used, or land used, in whole or in part, for other than one (1) or more of the following permitted principle uses:

(1) Use Unit 1 – Areawide Uses by Right

(2) Use Unit 5 – Single-Family Detached Dwelling

(3) Use Unit 6 – Single-Family Attached Dwelling (including townhouses, duplex, zero lot-line,

quadruplexes)

(4) Use Unit 7 – Multiple Family Dwelling (including "group quarters" but excluding funeral homes, hotels and motels)

(5) Use Unit 8 – Manufactured or Modular Home Dwelling

(6) Use Unit 11 – Offices and Studios

(7) Use Unit 12 – Entertainment and Eating Establishments (excluding drive-in restaurants)

(8) Use Unit 13 – Convenient Goods and Services

(9) Use Unit 14 – Shopping Goods and Services

(B) Use by Special Exception. Special Exception Uses may be permitted by the Board of Zoning Appeals following a public hearing, as indicated below, when such are deemed essential or desirable to the public convenience or welfare and are in harmony with the various elements or objectives of the Comprehensive Plan:

(1) Use Unit 2 – Areawide Special Exception Uses

(2) Use Unit 3 – Public Protection and Utility Facilities

(3) Use Unit 4 – Community Services [excluding protective shelters, residential treatment centers and transitional living centers, but including Children's Nursery/Day Care Center for more than 4 unrelated children (excluding those who live in the home)].

(4) Use Unit 28 – Home Occupations

(5) Use Unit 29-Mobile Office Trailer (as amended Mt.Vernon 5-16-13, Cynthiana 5-14-13, Poseyville 5-8-13, County 5-7-13)

(C) Accessory Uses.

(1) Accessory uses customarily incidental to the principal uses within the PUD are permitted as found in the R-3 or RM Residential Multiple Family District and in the B-2 or CG Commercial General District:

(2) Signs. Business signs accessory to principal office or commercial uses shall not exceed the following limitations, providing the approving authority may impose such additional restrictions as are necessary to maximize compatibility with other neighboring uses.

(a) General sign use conditions:

(i) No outdoor advertising (off-premises) signs shall be permitted.

(ii) No roof, projecting, flashing (does not include time and temperature signs), animated (unless approved by the Board of Zoning Appeals through a Special Exception) or revolving signs are permitted.

(iii) The leading edge of any ground sign shall be at least one (1) foot from the front or street property line.

(iv) No ground sign shall be located within one hundred fifty (150) feet of any residential area, either within or abutting the PUD, unless separated by an arterial street.

(v) Any ground sign shall maintain a minimum separation of one hundred (100) feet from any other ground sign.

(vi) Ground signs shall not exceed twenty-five (25) feet in height, measured from the mean curb level or the lot upon which it is erected, except a sign when located behind the building setback line may exceed twenty-five (25), but shall not exceed thirty-five (35) feet in height.

(vii) Only one side of a double-face sign shall be included in computation of display surface area:

(b) The following signs are not included in the computation of display surface area and are permitted:

(i) Nameplates, attached to the face of the wall and not exceeding two (2) square feet in surface area,

(ii) Temporary real estate and construction signs.

(iii) Signs which are not visible from a public street.

(iv) Signs painted on glass surface of windows or doors, and pertaining to the business conducted there in.

(v) Tablets built into the wall of a building or the structure and used for inscriptions or as memorial tablets or for similar purposes.

(vi) Signs of warning, directive, or instructional nature erected by a public utility, franchised transportation company or governmental agency.

(vii) Legal notices and street numbers.

(viii) Election campaign signs, if erected not more than forty-five (45) prior to an election and removed within seven (7) days following an election.

(ix) Signs located within a building.

(x) Signs, not exceeding three (3) square feet of display surface area, or warning, directive or instructional nature, including entrance, exit and rest room signs.

(xi) Signs which are attached as labels of a commodity offered for sale.

(c) Commercial PUD Signs. Signs located in a Commercial portion of the PUD shall comply with provisions set forth in Use Unit 21.

153.064 BULK AND AREA REQUIREMENTS IN PLANNED UNIT DEVELOPMENTS

(A) Intensity of Use. It is the intent of this code that the aggregate intensity of use within the Planned Unit Development remains substantially the same as that which would be permitted if the area were developed conventionally. However, within the development, the intensity may be reallocated.

(1) Residential Intensity.

(a) The residential intensity shall not exceed a maximum number of dwelling units computed as follows: Maximum number of Permitted Dwelling Units = Gross area of property located with a residential district divided by the minimum land area per dwelling unit permitted in the applicable use district. Thus, the maximum dwelling unit density is 6.223 dwelling units per acre for any portion of the PUD designated for single-family detached use, 12.446 dwelling units per acre for any portion of the PUD designated for single-family attached uses (townhouse, duplex, zero lot-line or quadruplex), and 29.04 dwelling units per acre for any portion of the PUD designated for multiple family uses.

(b) The minimum land area per dwelling unit, for the purpose of the above described computation, shall be the least restrictive minimum land area per dwelling unit permitted in the applicable district for the particular house type.

(2) Nonresidential intensity

(a) The nonresidential intensity shall not exceed a maximum permitted floor area computed as follows: Maximum Permitted Floor area = Gross area of property located within a nonresidential district multiplied by the floor area ratio permitted either by right or exception within the bulk and area requirements or the applicable use district, except where a floor area ratio is not specified, a floor area of 0.75 shall apply.

(b) The intensity of use of a PUD located within two or more zoning districts of the following differing general classifications -- Residential, Office, and Commercial -- shall be separately calculated and allocated within the PUD Development by said general classification.

(B) Lot Width and Lot Area Minimums: Within a PUD, a minimum lot size requirement of eight (800) hundred square feet shall apply to lots utilized for dwelling purposes. Additionally a minimum lot width requirement of twenty (20) feet shall apply to lot utilized for dwelling purposes.

(C) Livability Space:

(1) Within a PUD, livability space shall be provided in an aggregate amount of not less than the amount of livability space required by the applicable use district for conventional development of a comparable number of dwelling units. Required livability space may be provided on the lot containing the dwelling unit or units on which computed, or in common areas.

(2) Common livability space shall be designed and located so as to be accessible to the dwelling units served. Provisions for the ownership and maintenance of common livability space that will insure its

continuity and conservation shall be incorporated in the subdivision plat, in compliance with the provisions of Section 153.066(E).

(D) Building Height and Yards: Within a PUD, the Area Plan Commission shall prescribe building height limitation and minimum yards, which shall be incorporated within the subdivision plat in compliance with the provisions of Section 153.066(B).

(E) Setbacks for Abutting Public Streets:

(1) Within a PUD, building setbacks from abutting public streets for residential use, shall not be less than as prescribed for an RS or R-1 District.

(2) Within a PUD, building setbacks from abutting public streets for nonresidential uses shall not be less than as prescribed for an O or O-R District .

(F) Perimeter Requirements for PUDs: The Area Plan Commission shall prescribe perimeter requirements for screening, landscaping, and setbacks, as are necessary to assure compatibility with adjoining and proximate properties. These requirements shall be incorporated within the subdivision plat in compliance with the provisions of Sections 153.066(B) and 153.066(E).

153.065 OFF-STREET PARKING AND LOADING IN PLANNED UNIT DEVELOPMENTS

Off-street parking and loading spaces shall be provided as specified in the applicable Use Unit and in conformance with the requirements of Section 153.180, Off-Street Parking and Loading. Required spaces may be provided on the lot containing the uses for which it is intended to serve or in common areas. Common parking area shall be designed and located so as to be accessible to the uses it is intended to serve. Provisions for the ownership and maintenance of common parking space as will insure its continuity and conservation shall be incorporated in the subdivision plat in compliance with the provisions of Section 153.167(E).

153.066 ADMINISTRATION OF PLANNED UNIT DEVELOPMENT

(A) General:

(1) Any person, corporation, partnership, association, or combination thereof, owning or possessing a property right or interest in or to a tract of land may make application for the district designation PUD. Such application shall be accompanied by an Outline Development Plan processed in the manner set forth in divisions (B), (C), and (D) of this section.

(2) An application for the district designation PUD may be processed simultaneously with an application for an amendment to the general zoning district and made contingent upon approval of said application.

(B) Application and Outline Development Plan. An application for a Planned Unit Development shall be filed with the Area Plan Commission. The application shall be accompanied by payment of fee, to be paid in accordance with the established fee schedule. Such fee shall not include advertising and sign costs which shall be billed to the applicant. The application shall be in such format and content as the Area Plan Commission may be resolution establish. Three (3) copies of an Outline Development Plan shall accompany the filing of the application. The Outline Development Plan shall consist of maps and text which contain:

(1) A site plan reflecting:

(a) Proposed location of uses, including off-street parking, open spaces and public uses;

(b) Development Standards for location, height, setback and size of buildings and other structures;

(c) Public and private vehicular and pedestrian circulation;

(d) The approximate intensity of residential uses expressed in number of dwelling units and the approximate intensity of nonresidential uses expressed in floor area, allocated to each identifiable segment of the PUD;

(e) Proposed screening and landscaping;

(f) Proposed location, height, and size of any ground signs;

(g) Sufficient surrounding area to demonstrate the relationship of the PUD to adjoining uses, both existing and proposed.

(2) Existing topographic character of the land including identification of floodplain areas, tree areas, slope analysis and soil analysis.

(3) An explanation of the character of the PUD.

(4) The expected schedule of Development.

(5) The Area Plan Commission may require elevations and perspective drawings of the proposed buildings as part of required detailed site plan review.

(C) Public Hearing and Area Plan Commission Action.

(1) The Area Plan Commission, upon the filing of an application for the PUD district designation shall set the matter for public hearing and give proper notice. Within two (2) months after the filing of an application, the Area Plan Commission shall conduct the public hearing and shall determine:

(a) Whether the PUD is consistent with the Comprehensive Plan;

(b) Whether the PUD is in harmony with the existing and expected development of surrounding areas;

(c) Whether the PUD is a unified treatment of the development possibilities of the project site;

(d) Whether the PUD is consistent with the stated purposes and standards of this Chapter.

(2) The Area Plan Commission shall forward its recommendation, the application, and the Outline Development Plan to the applicable local legislative body for further hearing as provided in division (D) of this section.

(D) Local Legislative Body Action: Upon receipt of the application, Outline Development Plan, and Area Plan Commission recommendation, the local legislative shall hold a hearing, review the Outline Development Plan and approve, disapprove, modify or return the Outline Development Plan to the Area Plan Commission for further consideration. Upon approval, the Zoning Map shall be amended to reflect the PUD designation, and the applicant shall be authorized to process a subdivision plat incorporating the provisions of the Outline Development Plan.

(E) Planned Unit Development Subdivision Plat. A Planned Unit Development subdivision plat shall be filed with the Area Plan Commission and shall be processed in accordance with the Subdivision Regulations. In addition to the requirements of the Subdivision Regulations the plat shall include:

(1) Details as to the location of uses and street arrangement.

(2) Provisions for the ownership and maintenance of the common open space that will reasonably insure its continuity and conservation. Open space may be dedicated to a private association or to the public, provided that a dedication to the public shall not be accepted without the approval of the applicable local legislative body.

(3) Such covenants as will reasonably insure the continued compliance with the approved Outline Development Plan. The Area Plan Commission may require covenants which provide for detailed site plan review and approval of individual lots by said Commission prior to the issuance of any building permits within the PUD. In order that the public interest may be protected, the local legislative body shall be made beneficiary of covenants pertaining to such matters as location of uses, height of structures, setbacks, screening, and access. Such covenants shall provide that the local legislative body may enforce compliance therewith, and shall further provide that amendment to such covenants shall require the approval of the Area Plan Commission and the filing of record of a written amendment to the covenants, endorsed by the Area Plan Commission.

(F) Issuance of Building Permits: After the filing of an approved PUD subdivision plat and notice thereof to

the Building Inspector, no building permits shall be issued on lands within the PUD except in accordance with the approved plat and Outline Development Plan. A building permit for a free-standing or separate commercial structure within a PUD containing no commercial zoning shall not be issued until building permits have been issued for a least one-half (1/2) of the number of dwelling units on which the authorization of the commercial use is based.

(G) Amendments: Minor changes in the PUD may be authorized upon approval by the Area Plan Commission which may direct the processing of an amended subdivision plat incorporating such changes. This provided that substantial compliance is maintained with the Outline Development Plan and the purposes and standard of the PUD provisions as approved. Changes which would represent a significant departure from the Outline Development Plan shall require compliance with the notice and procedural requirements of an original Planned Unit Development.

(H) Abandonment. Abandonment of Planned Unit Development shall require approval of the affected local legislative body, upon a recommendation by the Area Plan Commission. This shall be based on an application for amendment to the Zoning Map repealing the PUD designation. Upon final action authorizing the abandonment of the Planned Unit Development, no building permit shall be issued except in accordance with the restriction and limitation of the previous zoning district or districts applicable to the affected property.

153.070 O or R-O RESIDENTIAL-OFFICE DISTRICT

153.071 PURPOSE -- O or R-O RESIDENTIAL-OFFICE DISTRICT

The Residential-Office District is intended as a transition zoning district between the Residential Districts and the Business/Commercial Districts. The District is often located where pre-existing residential uses are transitioning to business uses. Thus, the Residential-Office District accommodates the full range of residential uses while permitting designs to preserve and promote the development of efficient office facilities and to maximize compatibility with other land uses by:

(1) Establishing bulk and area controls.
(2) Requiring off-street parking.
(3) Controlling the number, area, location, and types of signs.
(4) Designed to provide area for offices, together with certain community facilities normally compatible with primary office uses.

153.072 USE REGULATIONS – O or R-O RESIDENTIAL-OFFICE DISTRICT

(A) Uses By Right. The principal uses permitted in the office district are designated by Use Unit. The Use Units are groupings of individual uses and are fully described, including their respective off-street parking, loading, and screening requirements and other use conditions in Sections 153.141 to 153.173. Except for parking lots, all activities including sales, displays, preparation and storage shall be conducted entirely within a completely enclosed building. No building or structure, or part thereof, shall be erected, altered or used, or land used, in whole or in part, for other than one or more of the following permitted principal uses:

(1) Use Unit 1 – Areawide Uses by Right
(2) Use Unit 5 – Single-Family Detached Dwelling
(3) Use Unit 6 – Single-Family Attached Dwelling (including townhouses, duplex, zero lot-line, quadruplexes)
(4) Use Unit 7 – Multiple Family Dwelling excluding "group quarters" uses (permitted by Special Exception) [excluding funeral homes, hotels and motels]
(5) Use Unit 8 – Manufactured or Modular Home Dwelling
(6) Use Unit 10 – Off-Street Parking Areas
(7) Use Unit 11 – Offices and Studios
(8) Part Use Unit 12 – Entertainment and Eating Establishments excluding entertainment and drinking establishments (excluding drive-in restaurants)
(9) Part Use Unit 13 – Convenience Goods and Services – limited to barber and beauty shops
(10) Use Unit 28 – Home Occupations
(11) Other Uses: Other uses or enterprises similar to the above, which in the judgment of the Area Plan Commission Board or Board of Zoning Appeals are similar to and not more objectionable to the general welfare, than the uses listed. Other uses so determined shall be regarded as listed uses. In no instance, however, shall the Area Plan Commission Board or Board of Zoning Appeals determine nor the regulations be so interpreted, that a use shall be permitted in a district where such use is specifically listed as first permissible in a less restricted district.

(B) Use by Special Exception. Special Exception Uses, as indicated below, may be permitted by the Board of Zoning Appeals following a public hearing when such are deemed essential or desirable to the public convenience or welfare and are in harmony with the various elements or objectives of the Comprehensive Plan:

(1) Use Unit 2 – Areawide Special Exception Uses
(2) Use Unit 3 – Public Protection and Utility Facilities
(3) Use Unit 4 – Community Services [including protective shelters, residential treatment centers and transitional living centers; and including Children's Nursery/Day Care Center for more than 4 unrelated

children (excluding those who live in the home)].

(4) Use Unit 13 – Convenient Goods and Services

(5) Use Unit 14 – Shopping Goods and Services

(6) Use Unit 29-Mobile Office Trailer

(as amended Mt.Vernon 5-16-13, Cynthiana 5-14-13, Poseyville 5-8-13, County 5-7-13)

(C) Special Exception Use Requirements. The Special Exception uses, permitted in the Office or Residential-Office District, as designated above, are subject to the minimum requirements set out below and such additional safeguards and conditions as may be imposed by the Board of Zoning Appeals:

(1) Except for parking lots, all activities including sales, displays, preparation and storage shall be conducted entirely with a completely enclosed building unless expressly permitted by the Board of Zoning Appeals in granting the Special Exception.

(2) The accessory use provisions of the Office District pertaining to signs apply to signs which are accessory to uses permitted by Special Exception; provided that each sign permitted shall primarily identify the principal office building, permitted accessory convenience goods and services shall be secondary.

(3) Multifamily use in the Office District shall comply with the bulk and area requirements of the RM/R-3District.

(4) Convenience Goods and Services in the Office District shall comply with the following requirements:

(a) No accessory convenience goods and services shall be permitted unless the principal building contains a minimum of 5000 square feet of floor space.

(b) The permitted accessory convenience goods and services listed below shall be located entirely within the principal building and shall have its pedestrian entrance and exit through the principal building.

(c) Permitted accessory convenience goods and services are limited to the following uses and use groupings:

(i) Book Store

(ii) Gift, Novelty, and Florist Shops

(iii) Newsstand

(iv) Medical, Dental, Optical, and Orthopedic Supplies

(v) Tobacco, Candy, and Nut Store

(d) The permitted accessory convenient goods and services listed above shall not occupy more than fifteen (15) percent of the gross floor area of the building in which located.

(5) Within the Office District, the principal office structure may include an eating place (5% maximum), and accessory goods and services (15% maximum), or a total of twenty (20) percent maximum of the total gross floor area devoted to the uses. Provided the eating places and accessory convenient goods and services do not exceed the maximum allowable for each individual use.

(6) Except as provided in Section 153.022(F) for public protection and utility facilities, a minimum frontage of one hundred (100) feet are the requirements of the Special Exception uses unless the Use Unit requirements are more restrictive, in which case the more restrictive shall apply.

(7) Barber and beauty shops may be permitted as either accessory or principal uses in an Office District by Special Exception.

(8) Special housing facilities in Use Unit 4 (community services), Use Unit 5 (Single-Family Detached) and Use Unit 7 (multifamily) shall meet applicable use conditions and off-street parking and loading requirements as provided in Section 153.180, in addition, to those required within the Use Unit itself.

(D) Accessory Uses Permitted. Those accessory uses which are customarily incidental to a principal permitted as follows:

(1) Management office, private recreation, laundry, and storage facilities for Use Unit 7 (Multiple Family Dwelling).

(2) Garage

(3) Carport

(4) Signs:
(a) Business Signs in Use Unit 21 (see Use Unit 21 for permitted business signs)
(b) Bulletin Board
(c) Identification Sign
(d) Real Estate Sign
(e) Construction Sign
(5) Shelter (storm)
(6) Private swimming pool
(7) Child care in Home (4 or less)
(8) Yard sales

(D) Accessory Use Conditions.

(1) General Conditions

(a) An accessory building erected as an integral part of the principal building shall be made structurally a part thereof, shall have a common wall therewith, and shall comply with the requirements applicable to the principal building.

(b) A detached accessory building shall not be located in the front or side yard or encroach upon a minimum building setback line, but this limitation shall not apply to garages and carports, provided the minimum required front yard or side yard set back line is observed.

(c) Within the rear yard, a detached accessory building shall be located at least five feet from interior lot line.

(2) Signs are permitted as follows in accordance with the yard requirement of Section 153.024(B)(5).

(a) One Bulletin Board may be erected on each street frontage of any educational, religious, institutional, or similar use in Use Unit 4 by Special Exception or other uses by Special Exception requiring announcement of its activities. The Bulletin Board shall not exceed twelve (12) square feet in surface area, nor fifteen (15) feet in height, and illumination, if any, shall be by constant light.

(b) One Identification Sign may be erected on each perimeter street frontage of a single-family detached subdivision, townhouse development, duplex structure, quadruplex development, multifamily-family development or permitted non- residential use. The sign shall not be permitted to exceed forty-eight (48) square feet of display surface area. The sign shall not exceed twelve (12) feet in height, and illumination, if any, shall be by constant light.

(c) During the period of construction, a temporary sign advertising the construction of improvements on the street premises, may be erected on each perimeter street frontage of the development. The sign shall not exceed forty (40) square feet in surface area, nor fifteen (15) feet in height, and illumination, if any, shall be by constant light.

(d) A temporary Real Estate Sign advertising the sale, rental, or lease of the premises may be erected on each street frontage of a lot. The sign shall not exceed eight (8) square feet in surface area, nor fifteen (15) feet in height, and illumination, if any, shall be by constant light.

(3) Private swimming pools (and all accessories thereto) shall meet safety requirements of State and local building codes.

(4) Child Care - In Home

(a) A maximum of four (4) non-related children may be cared for in the home without State Licensing. Five (5) to ten (10) children may be cared for in the home if the resident obtains a Special Exception and maintains continuous State Licensing. This number does not include those who reside in the residence.

(b) No person shall be employed other than a member of the immediate family residing on the premises or a substitute caregiver if the primary caregiver is unavailable.

(c) No signs advertising the Child Care Home shall be permitted on the lot.

(d) No exterior alteration of the dwelling or any customary accessory structure shall be made which would detract from the residential character of the structures.

(e) State-licensed child-care homes in existence on the effective date of this ordinance, but which

would be prohibited by these requirements, may continue as otherwise regulated herein.

(5) Yard sales shall occur only once a month for not more than three (3) consecutive days.

153.073 BULK AND AREA REQUIREMENTS -- O or R-O RESIDENTIAL-OFFICE DISTRICT

(A) Area: Every lot upon which a structure is hereafter erected shall front onto a dedicated street or public right-of-way and shall conform to the following minimum lot area and width requirements:

(1) Residential Use:

(a) The tract area shall be a minimum of seven thousand (7000) square feet with a minimum tract width of seventy (70) feet (where sanitary sewers are available) for single-family detached and single-family attached uses. For a quadruplex, (four units with two common walls), the minimum tract area is fourteen thousand 14,000) square feet. For multiple family uses and "group quarters" uses (Use Unit 7), the minimum tract area is ten thousand (10,000) square feet with a minimum tract width of one hundred (100) feet.

(b) It is assumed that there is a minimum of three townhouses per structure with a 70-foot tract width; thus, the minimum lot width is twenty (20) feet (with public sewers) for townhouses. Therefore, the interior lot of the three townhouses has a minimum lot area of two thousand (2,000) square feet and the exterior townhouse lots are a minimum of two thousand five hundred (2,500) square feet.

(c) It is assumed that there are two units per structure in a duplex with a 70-foot tract width; thus, the minimum lot width is thirty-five (35) feet (with public sewers) with one common wall for duplexes. Therefore, the minimum lot area is three thousand five hundred (3,500) square feet per dwelling unit (where sanitary sewers are available).

(d) It is assumed that there are four units per structure in a quadruplex with a 70-foot tract width; thus, the minimum lot width is twenty (35) feet (with public sewers) for a quadruplex with two common walls. Therefore, the minimum lot area is three thousand five hundred (3,500) square feet per dwelling unit (where sanitary sewers are available).

(e) Where no sanitary sewers are available and disposal is by soil absorption, the minimum lot area shall be one (1) acre per single-family detached dwelling and one (1) acre per duplex structure. The lot size for townhouse, quadruplex, multi-family structures and "group quarters" (Use Unit 7) structures shall not be less than one (1) acre, and the Posey County Health Department may require a larger lot size. For all residential uses, the Posey County Health Department may require a larger lot for any type of residential use.

(2) Non-Residential Use:

(a) The lot area shall be at least ten thousand (10,000) square feet with a minimum width of one hundred (100) feet.

(b) Where no sanitary sewers are available and disposal is by soil absorption, minimum lot of the area shall be one (1) acre. The Posey County Health Department may require a larger lot.

(B) Yards:

(1) Front Yard and Street Side Yard:

(a) Every lot or tract for single-family detached dwelling, townhouse structure, single-family attached structure, multiple family structure and "group quarters" structure (Use Unit 7), shall have a front yard (or street side yard) not less than twenty-five (25) feet in depth. The front yard (or street side yard) may be more or less than the 25-foot minimum depending on the predominant front yard (or street side yard) setback of existing structures along the blockface. If only one lot on the blockface is developed, the front yard (or street side yard) should be an average of the 25-foot setback and the existing structure setback. When the proposed structure falls between two developed lots, the front yard setback should be the average of the two abutting lot structure setbacks.

(b) Every lot used for a non-residential use shall have a front yard (or corner lot side yard) not less than twenty-five (25) feet in depth.

(c) If the there is no dedicated roadway right-of-way, the front yard (or corner lot side yard) setback

from the center of the roadway is twenty-five (25) feet plus one-half the right-of-way width of the applicable roadway functional class as if the roadway had been dedicated (adding 25 feet for a "local street," 40 feet for a "collector" or "secondary arterial," 60 feet for a "primary arterial," and 75 feet for a "divided primary arterial").

(2) Side Yard:

(a) Every lot used for a single-family detached dwelling or every tract used for a single-family attached structure shall have a side yard not less than five (5) feet in depth. The interior lot (or unit) of a townhouse structure with two common walls has no side yard requirement. The adjoining lots of a duplex with one common wall or adjoining lots of a zero lot-line development have no side yard requirement. The adjoining portion of lots of quadruplex structure with two common walls has no side year requirements.

(b) Every lot used for non-residential use shall have a side yard of not less than ten (10) feet in depth. However, when a non-residential use by right or Special Exception abuts a Residential or Office District, the minimum side yard requirement in the Office District of 10 feet shall be increased by one foot for each foot of building height exceeding 18 feet, but the required side yard shall not exceed 25 feet.

(3) Rear Yard:

(a) Every lot or tract for a residential use shall have a rear yard of not less than twenty (20) feet in depth. For a quadruplex, the rear yard must be observed for the tract holding the quadruplex structure, but is not observed for the adjoining portion of lots where a common wall exists between abutting units.

(b) Every lot used for a non-residential use shall have a rear yard of not less than ten (10) feet in depth. However, when a non-residential use by right or Special Exception abuts a Residential or Office District, the minimum rear yard requirement in the Office District of 10 feet shall be increased by one foot for each foot of building height exceeding 18 feet, but the required rear yard shall not exceed 25 feet.

(C) Height: No building or structure, or part thereof, shall be erected or altered to a height exceeding 2.5 stories, not to exceed thirty-five (35) feet.

(D) Lot Coverage: The combined area occupied by all principal and accessory buildings shall not exceed fifty percent (50%) of the area of the lot.

(E) Minimum Floor Area:

(1) Minimum livable floor area for a single-family detached dwelling unit shall be nine hundred and fifty (950) square feet and a minimum of twenty-three (23) feet wide.

(2) Minimum livable floor area for a single-family attached (townhouse, duplex, zero lot-line or quadruplex) shall be six hundred and fifty (650) square feet per dwelling unit, total of one thousand nine hundred fifty (1,950) square feet for a townhouse structure (assuming three units) total one thousand three hundred (1300) square feet per duplex structure (two units) total of six hundred and fifty (650) square feet per zero lot-line unit, and total of two thousand six hundred (2,600) square feet per quadruplex structure (four units).

(3) Minimum livable floor area for a multiple-family dwelling shall be four hundred (400) square feet for an efficiency apartment, five hundred (500) square feet for a one-bedroom apartment, six hundred (600) square feet for a two-bedroom apartment, and seven hundred (700) for a three-bedroom apartment.

(F) Minimum Lot Area Per Dwelling Unit: The minimum lot area per dwelling unit shall be one thousand five hundred (1,500) square feet for multiple family uses and other residential uses in the Use Group 7 containing multiple dwelling units.

(H) Floor Area Ratio: The floor area ratio shall not exceed 0.50.

(G) Dwelling Unit Density: The maximum number of dwelling units per acre is 29.04.

153.074 SITE PLAN REVIEW

By reason of potential adverse effects on public services or to neighboring land uses, site plan review and approval is required for all office developments for the purpose of assuring proper accessibility, circulation, functional relationships of uses and compatibility with adjoining and nearby development. No building permit shall be issued nor use commenced within this development except in accordance with an approved

site plan by the Area Plan Commission Executive Director. See Section 153.223 which also applies to the office site plan review process.

153.080 BUSINESS OR COMMERCIAL DISTRICT PROVISIONS

153.081 PURPOSES – BUSINESS OR COMMERCIAL DISTRICT

(A) General Purposes. The Commercial Districts are designed to:

(1) Achieve the commercial objectives of the Comprehensive Plan.

(2) Meet the needs for commercial goods and services for neighborhoods, communities and the region.

(3) Preserve and promote the development of efficient commercial facilities and encourage a compatible relationship between commercial facilities and other land uses and thoroughfares by:

(a) Differentiating the types and purposes of commercial activities.

(b) Establishing bulk and area controls.

(c) Requiring off-street loading and parking facilities.

(d) Controlling the number, area, location, and types of signs.

(e) Protecting the character of commercial districts and their peculiar suitability for commercial uses.

(4) Permit the compatible mixture of residential, office and commercial uses facilitating community livability by reducing the distances between uses to reduce dependence on the automobile.

(5) Require site development plan approval for all multiple family uses of eight (8) or more uses, all office uses and all commercial uses. (See Section 153.223.)

(B) Purposes of the B-1 Neighborhood Commercial District. The B-1 or NC District is designed to accommodate convenience goods and services in proximity to residential areas.

(C) Purposes of the B-1A or CS Shopping District. The CS District is designed to accommodate convenience, neighborhood, shopping areas providing a wide range of retail and personal service uses.

(D) Purposes of the B-2 or CG General Commercial District. The CG District is designed to:

(1) Accommodate existing development of mixed commercial uses which are well established, while providing a degree of protection to adjacent residential areas.

(2) Accommodate auto-oriented uses.

(E) Purposes of the CH Commercial High Intensity. The CH District is designed to:

(1) Accommodate high intensity commercial and related uses.

(2) Accommodate the grouping of certain commercial uses, wholesaling and warehousing uses, and restricted light industrial uses (by Special Exception) which are compatible with one another.

(F) Purposes of the CBD Central Business District.

(1) The CBD District is designed to:

(a) Accommodate and encourage the most desirable, most productive, most intense use of land, without regard to the regulation of building height floor area, land coverage or parking space requirements within the central core area of the City.

(b) Preserve and promote the public and private investment in the existing central core area.

(2) CBD District contained within this defined area:

(a) The Ohio River to the South,

(b) Fifth Street to the North,

(c) College Avenue to the West, and

(d) Walnut Street to the East.

(3) Before additional area, contiguous to that area presently designated CBD, is considered for inclusion within the CBD District consideration should be given to the appropriateness of the B-2 or CG, Commercial General classification. This alternate designation is intended to create a less congested district than that of the CBD.

153.082 USE REGULATIONS – B-1 or NC NEIGHBORHOOD COMMERCIAL DISTRICT

(A) Use by Right. The principal uses permitted in the Neighborhood Commercial Districts are designed by Use Units. These units are groupings of individual uses and are fully described, including their respective off-street parking, loading, and screening requirements and other use conditions in Sections 153.141 to 153.173. No building or structure, or part thereof, shall be erected, altered, or used, or land used in whole or in part for other than one or more of the following specified permitted principal uses in accordance with the limitations herein-after specified:

(1) Use Unit 1 – Areawide Uses by Right

(2) Use Unit 5 – Single-Family Detached Dwelling

(3) Use Unit 6 – Single-Family Attached Dwelling (including townhouses, duplex, zero lot-line, quadruplexes)

(4) Use Unit 7 – Multiple Family Dwelling (including "group quarters" uses, but excluding funeral homes, hotels and motels)

(5) Use Unit 8 – Manufactured or Modular Home Dwelling

(6) Use Unit 10 – Off-Street Parking Areas

(7) Use Unit 11 – Offices and Studios including photographer's studio

(8) Part Use Unit 12 – Entertainment and Eating Establishments: limited to delicatessen

(9) Part Use Unit 13 – Convenience Goods and Services: limited to confectionery or ice cream; drugs; bakery; personal service shops.

(10) Part Use Unit 14 – Shopping Goods and Services: limited to book and stationery; newsstand or sundry; florists; fruit or vegetables; gifts; home appliances; jewelry; package liquor; meat market; music; photographic supplies; shoe; clothing; variety; paint; art supplies; custom dressing, tailor or millinery shops; radio, television and phonograph sales and service; bicycle sales and service

(11) Part Use Unit 15 – Other Trades and Services: limited to furniture; funeral home; small engine repair sales and service up to 18 HP; chain saw sales and service; power tools sales and service (other uses in Unit 15 and sexually oriented uses are prohibited)

(12) Part Use Unit 21 – Business Signs and Outdoor Advertising – excluding outdoor advertising (off-premises) signs and retail uses.

(13) Use Unit 28 – Home Occupations

(14) Other Uses: Other uses or enterprises similar to the above, which in the judgment of the Area Plan Commission Board or Board of Zoning Appeals are similar to and not more objectionable to the general welfare, than the uses listed. Other uses so determined shall be regarded as listed uses. In no instance, however, shall the Area Plan Commission Board or Board of Zoning Appeals determine nor the regulations be so interpreted, that a use shall be permitted in a district where such use is specifically listed as first permissible in a less restricted district or where such use is permitted by Special Exception in this district.

(15) Use Unit 29-Mobile Office Trailer, so long as property does not abut a residential district. (as amended Mt.Vernon 5-16-13, Cynthiana 5-14-13, Poseyville 5-8-13, County 5-7-13)

(B) Use by Special Exception. Special Exception Uses may be permitted by the Board of Zoning Appeals following a public hearing, as indicated below, when such are deemed essential or desirable to the public convenience or welfare and are in harmony with the various elements or objectives of the Comprehensive Plan:

(1) Use Unit 2 – Areawide Special Exception Uses

(2) Use Unit 3 – Public Protection and Utility Facilities

(3) Use Unit 4 – Community Services [including protective shelters, residential treatment centers and transitional living centers; and including Children's Nursery/Day Care Center for more than 4 unrelated

children (excluding those who live in the home)].

(4) Use Unit 10 – Off-Street Parking Areas

(5) Part Use Unit 14 – Shopping Goods and Services: limited to Self-service launderettes, self-service dry cleaning establishments

(6) Use Unit 16 – Gasoline Service Stations

(7) Use Unit 29-Mobile Office Trailer when property abuts a residential district. (as amended Mt.Vernon 5-16-13, Cynthiana 5-14-13, Poseyville 5-8-13, County 5-7-13)

(C) Limitations on Uses by Right and Special Exception:

(1) Except for accessory parking lots and service stations, all activities including sales, display, preparations and storage shall be conducted entirely within a completely enclosed building. (Except those that may be permitted by the Board of Zoning Appeals in granting a Special Exception.).

(2) All products shall be sold as retail on the premises.

(3) All on-site lighting shall be directed toward the structures on-site and away from any neighboring residential districts. Areawide loudspeakers or paging systems will not be allowed.

(D) Accessory Uses Permitted. Those accessory uses which are customarily incidental to a principal permitted use are as follows:

(1) Management office, private recreation, laundry, and storage facilities for Use Unit 7 (Multiple Family Dwelling).

(2) Garage

(3) Carport

(4) Signs:

(a) Business Signs in Use Unit 21 (see Use Unit 21 for permitted business signs)

(b) Bulletin Board

(c) Identification Sign

(d) Real Estate Sign

(e) Construction Sign

(5) Shelter (storm)

(6) Private swimming pool

(7) Child care in Home (4 or less)

(8) Yard sales on residential lots

(E) Accessory Use Conditions:

(1) General Conditions:

(a) An accessory building erected as an integral part of the principal building shall be made structurally a part thereof, shall have a common wall therewith, and shall comply with the requirements applicable to the principal building.

(b) A detached accessory building shall not be located in the front or side yard or encroach upon a minimum building setback line, but this limitation shall not apply to garages and carports, provided the minimum required front yard or side yard set back line is observed.

(c) Within the rear yard, a detached accessory building shall be located at least five feet from interior lot line.

(2) Signs. Signs for residential uses and community services of Use Unit 4 are permitted as follows in accordance with the yard requirement of Section 153.024(B)(5). Office and business signs are permitted in accordance with Use Unit 21 (excluding outdoor advertising or off-premises signs).

(a) One Bulletin Board may be erected on each street frontage of any educational, religious, institutional, or similar use in Use Unit 4 by Special Exception or other uses by Special Exception requiring announcement of its activities. The Bulletin Board shall not exceed twelve (12) square feet in surface area, nor fifteen (15) feet in height, and illumination, if any, shall be by constant light.

(b) One Identification Sign may be erected on each perimeter street frontage of a single-family detached subdivision, townhouse development, duplex structure, quadruplex development, multifamily-family development or permitted non- residential use. The sign shall not be permitted to exceed forty-eight (48)

square feet of display surface area. The sign shall not exceed twelve (12) feet in height, and illumination, if any, shall be by constant light.

(c) During the period of construction, a temporary sign advertising the construction of improvements on the street premises, may be erected on each perimeter street frontage of the development. The sign shall not exceed forty (40) square feet in surface area, nor fifteen (15) feet in height, and illumination, if any, shall be by constant light.

(d) A temporary Real Estate Sign advertising the sale, rental, or lease of the premises may be erected on each street frontage of a lot. The sign shall not exceed eight (8) square feet in surface area, nor fifteen (15) feet in height, and illumination, if any, shall be by constant light.

(3) Private swimming pools (and all accessories thereto) shall meet safety requirements of State and local building codes.

(4) Child Care - In Home:

(a) A maximum of four (4) non-related children may be cared for in the home without State Licensing. Five (5) to ten (10) children may be cared for in the home if the resident obtains a Special Exception and maintains continuous State Licensing. This number does not include those who reside in the residence.

(b) No person shall be employed other than a member of the immediate family residing on the premises or a substitute caregiver if the primary caregiver is unavailable.

(c) No signs advertising the Child Care Home shall be permitted on the lot.

(d) No exterior alteration of the dwelling or any customary accessory structure shall be made which would detract from the residential character of the structures.

(e) State-licensed child-care homes in existence on the effective date of this ordinance, but which would be prohibited by these requirements, may continue as otherwise regulated herein.

(5) Yard sales on residential lots shall occur only once a month for not more than three (3) consecutive days.

153.083 BULK AND AREA REQUIREMENTS – B-1 or NC NEIGHBORHOOD COMMERCIAL DISTRICT

(A) Area. Every lot upon which a structure is hereafter erected shall front onto a dedicated street or public right-of-way and shall conform to the following minimum lot area and width requirements:

(1) Residential Use:

(a) The tract area shall be a minimum of seven thousand (7000) square feet with a minimum tract width of seventy (70) feet (where sanitary sewers are available) for single-family detached and single-family attached uses. For a quadruplex, (four units with two common walls), the minimum tract area is fourteen thousand 14,000) square feet. For multiple family uses and “group quarters” uses (Use Unit 7), the minimum tract area ten thousand (10,000) square feet with a minimum tract width of one hundred (100) feet.

(b) It is assumed that there is a minimum of three townhouses per structure with a 70-foot tract width; thus, the minimum lot width is twenty (20) feet (with public sewers) for townhouses. Therefore, the interior of the three townhouses has a minimum lot area of two thousand (2,000) square feet and the exterior townhouse lots are a minimum of two thousand five hundred (2,500) square feet.

(c) It is assumed that there are two units per structure in a duplex with a 70-foot tract width; thus, the minimum lot width is thirty-five (35) feet (with public sewers) with one common wall for duplexes. Therefore, the minimum lot area is three thousand five hundred (3,500) square feet per dwelling unit (where sanitary sewers are available).

(d) It is assumed that there are four units per structure in a quadruplex with a 70-foot tract width; thus, the minimum lot width is twenty (35) feet (with public sewers) for a quadruplex with two common walls. Therefore, the minimum lot area is three thousand five hundred (3,500) square feet per dwelling unit (where sanitary sewers are available).

(e) Where no sanitary sewers are available and disposal is by soil absorption, the minimum lot area shall be one (1) acre per single-family detached dwelling and one (1) acre per duplex structure. The lot size for townhouse, quadruplex, multi-family structures and "group quarters" (Use Unit 7) structures shall not be less than one (1) acre, and the Posey County Health Department may require a larger lot size. For all residential uses, the Posey County Health Department may require a larger lot for any type of residential use.

(2) Non-Residential Use:

(a) The lot area shall be at least ten thousand 10,000) square feet with a minimum width of one hundred (100) feet.

(b) Where no sanitary sewers are available and disposal is by soil absorption, minimum lot of the area shall be one (1) acre. The Posey County Health Department may require a larger lot.

(B) Yards:

(1) Front Yard and Street Side Yard:

(a) Every lot or tract shall have a front yard (or street side yard) not less than ten (10) feet in depth. If the proposed structure falls between two developed lots, the front yard setback should be the average of the two abutting lot structure setbacks.

(b) When a B or C District abuts an O or R District, the front yard requirements of the O or R District should be observed for 200 feet into the B or C District (except the CBD). When a B or C District abuts an O or R District, off-street parking is prohibited in the front and street side yards; however, off-street parking would be permitted in front and street side yards greater than 10 feet provided the side yards are landscaped to hide the parking area and the parking area does not extend into the first 10 feet of the front or street side yard. The front yard and street side yard requirements of the B and C District may be reduced to none if adjacent lots or the majority of the lots on the blockface have no front yard or street side yard setback.

(c) If there is no dedicated roadway right-of-way, the front yard (or corner lot side yard) setback from the center of the roadway is twenty-five (25) feet plus one-half the right-of-way width of the applicable roadway functional class as if the roadway had been dedicated (adding 25 feet for a "local street," 40 feet for a "collector" or "secondary arterial," 60 feet for a "primary arterial," and 75 feet for a "divided primary arterial").

(2) Side Yard:

(a) Every lot shall have a side yard not less than ten (10) feet in depth.

(b) The interior lot (or unit) of a townhouse structure with two common walls has no side yard requirement. The adjoining lots of a duplex with one common wall or adjoining lots of a zero lot-line development have no side yard requirement. The adjoining portion of lots of quadruplex structure with two common walls has no side year requirements.

(c) When a B or C District (except CBD) abuts an R-3, RM, O or R-O District, the side yard requirement is 20 feet, but may be reduced to 10 feet if landscaped. When a B or C District (except the CBD) abuts an R-1, RS, RT or R-2 District, the minimum side yard requirement is 20 feet, and is to be increased one additional foot for each foot of building height exceeding 28 feet and cannot be reduced by landscaping.

(3) Rear Yard:

(a) Every lot or tract shall have a rear yard of not less than twenty (20) feet in depth. For a quadruplex, the rear yard must be observed for the tract holding the quadruplex structure, but is not observed for the adjoining portion of lots where a common wall exists between abutting units.

(b) When a B or C District (except the CBD) abuts an R-1, RS, RT or R-2 District, the minimum rear yard requirement of 20 feet is to be increased one additional foot for each foot of building height exceeding 28 feet and cannot be reduced by landscaping.

(C) Height: No building or structure, or part thereof, shall be erected or altered to a height exceeding 2.5 stories, not to exceed thirty-five (35) feet.

(D) Lot Coverage: For residential uses on individual lots or tracts not mixed with office or commercial

uses, the combined area occupied by all principal and accessory buildings shall not exceed fifty percent (50%) of the area of the lot.

(E) Minimum Floor Area:

(1) Minimum livable floor area for a single-family detached dwelling unit shall be nine hundred and fifty (950) square feet and a minimum of twenty-three (23) feet wide.

(2) Minimum livable floor area for a single-family attached (townhouse, duplex, zero lot-line or quadruplex) shall be six hundred and fifty (650) square feet per dwelling unit, total of one thousand nine hundred fifty (1,950) square feet for a townhouse structure (assuming three units) total one thousand three hundred (1300) square feet per duplex structure (two units) total of six hundred and fifty (650) square feet per zero lot-line unit, and total of two thousand six hundred (2,600) square feet per quadruplex structure (four units).

(3) Minimum livable floor area for a multiple-family dwelling shall be four hundred (400) square feet for an efficiency apartment, five hundred (500) square feet for a one-bedroom apartment, six hundred (600) square feet for a two-bedroom apartment, and seven hundred (700) for a three-bedroom apartment.

(F) Minimum Lot Area Per Dwelling Unit: For residential uses on individual lots or tracts not mixed with office or commercial uses, the minimum lot area per dwelling unit shall be one thousand five hundred (1,500) square feet for multiple family uses and other residential uses in the Use Group 7 containing multiple dwelling units.

(G) Floor Area Ratio: The floor area ratio shall not exceed 0.50.

(H) Dwelling Unit Density: The maximum number of dwelling units per acre is 29.04.

153.084 USE REGULATIONS – B-1A or CS COMMERCIAL SHOPPING DISTRICT

(A) Use by Right. The principal uses permitted in the Commercial Shopping Districts are designed by Use Units. These units are groupings of individual uses and are fully described, including their respective off-street parking, loading, and screening requirements and other use conditions in Sections 153.141 to 153.173. No building or structure, or part thereof, shall be erected, altered, or used, or land used in whole or in part for other than one or more of the following specified permitted principal uses in accordance with the limitations hereinafter specified:

(1) Use Unit 1 – Areawide Uses by Right

(2) Use Unit 3 – Public Protection and Utility Facilities

(3) Use Unit -- Community Services [including protective shelters, residential treatment centers and transitional living centers; and including Children's Nursery/Day Care Center for more than 4 unrelated children (excluding those who live in the home)].

(4) Use Unit 5 – Single-Family Detached Dwelling

(5) Use Unit 6 – Single-Family Attached Dwelling (including townhouses, duplex, zero lot-line, quadruplexes)

(6) Use Unit 7 – Multiple Family Dwelling (including "group quarters" uses, but excluding funeral homes, hotels and motels)

(7) Use Unit 8 – Manufactured or Modular Home Dwelling

(8) Use Unit 10 – Off-Street Parking Areas

(9) Use Unit 11 – Offices and Studios

(10) Part Use Unit 12 – Entertainment and Eating Establishments excluding entertainment and drinking establishments

(11) Use Unit 13 – Convenience Goods and Services

(12) Use Unit 14 – Shopping Goods and Services

(13) Use Unit 16 – Gasoline Service Stations

(14) Part Use Unit 21 – Business Signs and Outdoor Advertising – excluding outdoor advertising (off-premises) signs

(15) Use Unit 28 – Home Occupations

(16) Other Uses: Other uses or enterprises similar to the above, which in the judgment of the Area Plan Commission Board or Board of Zoning Appeals are similar to and not more objectionable to the general welfare, than the uses listed. Other uses so determined shall be regarded as listed uses. In no instance, however, shall the Area Plan Commission Board or Board of Zoning Appeals determine nor the regulations be so interpreted, that a use shall be permitted in a district where such use is specifically listed as first permissible in a less restricted district or where such use is permitted by Special Exception in this district.

(17) Use Unit 29-Mobile Office Trailer, so long as property does not abut a residential district. (as amended Mt.Vernon 5-16-13, Cynthiana 5-14-13, Poseyville 5-8-13, County 5-7-13)

(B) Use by Special Exception. Special Exception Uses may be permitted by the Board of Zoning Appeals following a public hearing, as indicated below, when such are deemed essential or desirable to the public convenience or welfare and are in harmony with the various elements or objectives of the Comprehensive Plan:

(1) Use Unit 2 – Areawide Special Exception Uses

(2) Use Unit 29-Mobile Office Trailer when property abuts a residential district. (as amended Mt.Vernon 5-16-13, Cynthiana 5-14-13, Poseyville 5-8-13, County 5-7-13)

(C) Limitations on Uses by Right and Special Exception:

(1) Except for accessory parking lots and service stations, all activities including sales, display, preparations and storage shall be conducted entirely within a completely enclosed building. (Except those that may be permitted by the Board of Zoning Appeals in granting a Special Exception.

(2) All products shall be sold as retail on the premises.

(3) All on-site lighting shall be directed toward the structures on-site and away from any neighboring residential districts. Areawide loudspeakers or paging systems will not be allowed.

(D) Accessory Uses Permitted. Those accessory uses which are customarily incidental to a principal permitted use are as follows:

(1) Management office, private recreation, laundry, and storage facilities for Use Unit 7 (Multiple Family Dwelling).

(2) Garage

(3) Carport

(4) Signs:

(a) Business Signs in Use Unit 21 (see Use Unit 21 for permitted business signs)

(b) Bulletin Board

(c) Identification Sign

(d) Real Estate Sign

(e) Construction Sign

(4) Shelter (storm)

(5) Private swimming pool

(6) Child care in Home (4 or less)

(7) Yard sales on residential lots

(E) Accessory Use Conditions:

(1) General Conditions:

(a) An accessory building erected as an integral part of the principal building shall be made structurally a part thereof, shall have a common wall therewith, and shall comply with the requirements applicable to the principal building

(b) A detached accessory building shall not be located in the front or side yard or encroach upon a minimum building setback line, but this limitation shall not apply to garages and carports, provided the minimum required front yard or side yard set back line is observed.

(c) Within the rear yard, a detached accessory building shall be located at least five feet from interior lot line.

(2) Signs for residential uses and community services of Use Unit 4 are permitted as follows in accordance with the yard requirement of Section 153.024(B)(5). Office and business signs are permitted in accordance with Use Unit 21 (excluding outdoor advertising or off-premises signs).

(a) One Bulletin Board may be erected on each street frontage of any educational, religious, institutional, or similar use in Use Unit 4 by Special Exception or other uses by Special Exception requiring announcement of its activities. The Bulletin Board shall not exceed twelve (12) square feet in surface area, nor fifteen (15) feet in height, and illumination, if any, shall be by constant light.

(b) One Identification Sign may be erected on each perimeter street frontage of a single-family detached subdivision, townhouse development, duplex structure, quadruplex development, multifamily-family development or permitted non- residential use. The sign shall not be permitted to exceed forty-eight (48) square feet of display surface area. The sign shall not exceed twelve (12) feet in height, and illumination, if any, shall be by constant light.

(c) During the period of construction, a temporary sign advertising the construction of improvements on the street premises, may be erected on each perimeter street frontage of the development. The sign shall not exceed forty (40) square feet in surface area, nor fifteen (15) feet in height, and illumination, if any, shall be by constant light.

(d) A temporary Real Estate Sign advertising the sale, rental, or lease of the premises may be erected on each street frontage of a lot. The sign shall not exceed eight (8) square feet in surface area, nor fifteen (15) feet in height, and illumination, if any, shall be by constant light.

(3) Private swimming pools (and all accessories thereto) shall meet safety requirements of State and local building codes.

(4) Child Care - In Home

(a) A maximum of four (4) non-related children may be cared for in the home without State Licensing. Five (5) to ten (10) children may be cared for in the home if the resident obtains a Special Exception and maintains continuous State Licensing. This number does not include those who reside in the residence.

(b) No person shall be employed other than a member of the immediate family residing on the premises or a substitute caregiver if the primary caregiver is unavailable.

(c) No signs advertising the Child Care Home shall be permitted on the lot.

(d) No exterior alteration of the dwelling or any customary accessory structure shall be made which would detract from the residential character of the structures.

(e) State-licensed child-care homes in existence on the effective date of this ordinance, but which would be prohibited by these requirements, may continue as otherwise regulated herein.

(5) Yard sales on residential lots shall occur only once a month for not more than three (3) consecutive days.

153.085 BULK AND AREA REQUIREMENTS – B-1A or CS COMMERCIAL SHOPPING DISTRICT

(A) Area. Every lot upon which a structure is hereafter erected shall front onto a dedicated street or public right-of-way and shall conform to the following minimum lot area and width requirements:

(1) Residential Use:

(a) The tract area shall be a minimum of ten thousand (10,000) square feet with a minimum tract width of one hundred (100) feet (where sanitary sewers are available) for single-family detached and single-family attached uses. For a quadruplex, (four units with two common walls), the minimum tract area is fourteen thousand 14,000) square feet. For multiple family uses and "group quarters" uses (Use Unit 7), the minimum tract area ten thousand (10,000) square feet with a minimum tract width of one hundred (100) feet.

(b) It is assumed that there is a minimum of four townhouses per structure with a 100-foot tract width; thus, the minimum lot width is twenty (20) feet (with public sewers) for townhouses. Therefore, the interior lots of the four townhouses have a minimum lot area of two thousand (2,000) square feet and the exterior townhouse lots are a minimum of three thousand (3,000) square feet.

(c) It is assumed that there are two units per structure in a duplex with a 100-foot tract width; thus, the minimum lot width is fifty (50) feet (with public sewers) with one common wall for duplexes. Therefore, the minimum lot area is five thousand (5,000) square feet per dwelling unit (where sanitary sewers are available).

(d) It is assumed that there are four units per structure in a quadruplex with a 100-foot tract width; thus, the minimum lot width is fifty (50) feet (with public sewers) for a quadruplex with two common walls. Therefore, the minimum lot area is five thousand (5,000) square feet per dwelling unit (where sanitary sewers are available).

(e) Where no sanitary sewers are available and disposal is by soil absorption, the minimum lot area shall be one (1) acre per single-family detached dwelling and one (1) acre per duplex structure. The lot size for townhouse, quadruplex, multi-family structures and "group quarters" (Use Unit 7) structures shall not be less than one (1) acre, and the Posey County Health Department may require a larger lot size. For all residential uses, the Posey County Health Department may require a larger lot for any type of residential use.

(2) Non-Residential Use:

(a) The lot area shall be at least ten thousand 10,000) square feet with a minimum width of one hundred (100) feet.

(b) Where no sanitary sewers are available and disposal is by soil absorption, minimum lot of the area shall be one (1) acre. The Posey County Health Department may require a larger lot. .

(B) Yards:

(1) Front Yard and Street Side Yard:

(a) Every lot or tract shall have a front yard (or street side yard) not less than ten (10) feet in depth. If the proposed structure falls between two developed lots, the front yard setback should be the average of the two abutting lot structure setbacks.

(b) When a B or C District abuts an O or R District, the front yard requirements of the O or R District should be observed for 200 feet into the B or C District (except the CBD). When a B or C District abuts an O or R District, off-street parking is prohibited in the front and street side yards; however, off-street parking would be permitted in front and street side yards greater than 10 feet provided the side yards are landscaped to hide the parking area and the parking area does not extend into the first 10 feet of the front or street side yard. The front yard and street side yard requirements of the B and C District may be reduced to none if adjacent lots or the majority of the lots on the blockface have no front yard or street side yard setback.

(c) If there is no dedicated roadway right-of-way, the front yard (or corner lot side yard) setback from the center of the roadway is twenty-five (25) feet plus one-half the right-of-way width of the applicable roadway functional class as if the roadway had been dedicated (adding 25 feet for a "local street," 40 feet for a "collector" or "secondary arterial," 60 feet for a "primary arterial," and 75 feet for a "divided primary arterial").

(2) Side Yard:

(a) Every lot shall have a side yard not less than ten (10) feet in depth.

(b) The interior lot (or unit) of a townhouse structure with two common walls has no side yard requirement. The adjoining lots of a duplex with one common wall or adjoining lots of a zero lot-line development have no side yard requirement. The adjoining portion of lots of quadruplex structure with two common walls has no side year requirements.

(c) When a B or C District (except CBD) abuts an R-3, RM, O or R-O District, the side yard requirement is 20 feet, but may be reduced to 10 feet if landscaped. When a B or C District (except the CBD) abuts an R-1, RS, RT or R-2 District, the minimum side yard requirement is 20 feet, and is to be increased one additional foot for each foot of building height exceeding 28 feet and cannot be reduced by landscaping.

(3) Rear Yard:

(a) Every lot or tract shall have a rear yard of not less than twenty (20) feet in depth. For a quadruplex, the rear yard must be observed for the tract holding the quadruplex structure, but is not observed for the adjoining portion of lots where a common wall exists between abutting units.

(b) When a B or C District (except the CBD) abuts an R-1, RS, RT or R-2 District, the minimum rear yard requirement of 20 feet is to be increased one additional foot for each foot of building height exceeding 28 feet and cannot be reduced by landscaping.

(C) Height: No building or structure, or part thereof, shall be erected or altered to a height exceeding four (4) stories, not to exceed fifty (50) feet.

(D) Lot Coverage: For residential uses on individual lots or tracts not mixed with office or commercial uses, the combined area occupied by all principal and accessory buildings shall not exceed fifty percent (50%) of the area of the lot.

(E) Minimum Floor Area:

(1) Minimum livable floor area for a single-family detached dwelling unit shall be nine hundred and fifty (950) square feet and a minimum of twenty-three (23) feet wide.

(2) Minimum livable floor area for a single-family attached (townhouse, duplex, zero lot-line or quadruplex) shall be six hundred and fifty (650) square feet per dwelling unit, total of one thousand nine hundred fifty (1,950) square feet for a townhouse structure (assuming three units) total one thousand three hundred (1300) square feet per duplex structure (two units) total of six hundred and fifty (650) square feet per zero lot-line unit, and total of two thousand six hundred (2,600) square feet per quadruplex structure (four units).

(3) Minimum livable floor area for a multiple-family dwelling shall be four hundred (400) square feet

for an efficiency apartment, five hundred (500) square feet for a one-bedroom apartment, six hundred (600) square feet for a two-bedroom apartment, and seven hundred (700) for a three-bedroom apartment.

(F) Minimum Lot Area per Dwelling Unit: For residential uses on individual lots or tracts not mixed with office or commercial uses, the minimum lot area per dwelling unit shall be one thousand five hundred (1,500) square feet for multiple family uses and other residential uses in the Use Group 7 containing multiple dwelling units.

(G) Floor Area Ratio: The floor area ratio shall not exceed 0.50.

(H) DWELLING UNIT DENSITY: The maximum number of dwelling units per acre is 29.04.

153.086 USE REGULATIONS – B-2 or CG COMMERCIAL GENERAL DISTRICT

(A) Use by Right. The principal uses permitted in the Commercial General Districts are designed by Use Units. These units are groupings of individual uses and are fully described, including their respective off-street parking, loading, and screening requirements and other use conditions in Sections 153.141 to 153.173. No building or structure, or part thereof, shall be erected, altered, or used, or land used in whole or in part for other than one or more of the following specified permitted principal uses in accordance with the limitations hereinafter specified:

(1) Use Unit 1 – Areawide Uses by Right

(2) Use Unit 3 – Public Protection and Utility Facilities

(3) Use Unit 4 – Community Services [including protective shelters, residential treatment centers and transitional living centers; and including Children's Nursery/Day Care Center for more than 4 unrelated children (excluding those who live in the home)]

(4) Use Unit 5 – Single-Family Detached Dwelling

(5) Use Unit 6 – Single-Family Attached Dwelling (including townhouses, duplex, zero lot-line, quadruplexes)

(6) Use Unit 7 – Multiple Family Dwelling (including "group quarters" uses, but excluding funeral homes, hotels and motels)

(7) Use Unit 8 – Manufactured or Modular Home Dwelling

(8) Use Unit 10 – Off-Street Parking Areas

(9) Use Unit 11 – Offices and Studios

(10) Use Unit 12 – Entertainment and Eating Establishments

(11) Use Unit 13 – Convenience Goods and Services

(12) Use Unit 14 – Shopping Goods and Services

(13) Use Unit 15 – Other Trades and Services (excluding sexually oriented businesses)

(14) Use Unit 16 -- Gasoline Service Stations

(15) Use Unit 17 – Automotive and Allied Activities

(16) Use Unit 18 – Drive-In Restaurants

(17) Use Unit 19 – Hotel, Motel and Recreation Facilities

(18) Use Unit 21 – Business Signs and Outdoor Advertising

(17) Use Unit 28 – Home Occupations

(18) Other Uses: Other uses or enterprises similar to the above, which in the judgment of the Area Plan Commission Board or Board of Zoning Appeals are similar to and not more objectionable to the general welfare, than the uses listed. Other uses so determined shall be regarded as listed uses. In no instance, however, shall the Area Plan Commission Board or Board of Zoning Appeals determine nor the regulations be so interpreted, that a use shall be permitted in a district where such use is specifically listed as first permissible in a less restricted district or where such use is permitted by Special Exception in this district.

(19) Use Unit 29-Mobile Office Trailer, so long as property does not abut a residential district. (as amended Mt.Vernon 5-16-13, Cynthiana 5-14-13, Poseyville 5-8-13, County 5-7-13)

(B) Use by Special Exception. Special Exception Uses may be permitted by the Board of Zoning Appeals following a public hearing, as indicated below, when such are deemed essential or desirable to the public convenience or welfare and are in harmony with the various elements or objectives of the Comprehensive Plan:

(1) Use Unit 2 – Areawide Special Exception Uses

(2) Use Unit 29-Mobile Office Trailer when property abuts a residential district. (as amended Mt.Vernon 5-16-13, Cynthiana 5-14-13, Poseyville 5-8-13, County 5-7-13)

(C) Limitations on Uses by Right and Special Exception:

(1) All activities including sales, display, preparations and storage shall be conducted entirely within a completely enclosed building except:

(a) Accessory parking lots and service stations.

b) Retail stores in Use Units 14 and 15 involving the sale or rental of building materials, lawn and garden equipment, lumber, shrubs, trees and flowers.

(c) Uses in Use Unit 17 (automobile and allied products.

(d) Uses that may be permitted by the Board of Zoning Appeals in granting a Special Exception.

(2) All products shall be sold as retail on the premises.

(3) All on-site lighting shall be directed toward the structures on-site and away from any neighboring residential districts. Areawide loudspeakers or paging systems will not be allowed.

(D) Accessory Uses Permitted. Those accessory uses which are customarily incidental to a principal permitted use are as follows:

(1) Management office, private recreation, laundry, and storage facilities for Use Unit 7 (Multiple Family Dwelling).

(2) Garage

(3) Carport

(4) Signs:

(a) Business Signs in Use Unit 21 (see Use Unit 21 for permitted business signs)

(b) Bulletin Board

(c) Identification Sign

(d) Real Estate Sign

(e) Construction Sign

(5) Shelter (storm)

(6) Private swimming pool

(7) Child care in Home (4 or less)

(8) Yard sales on residential lots.

(E) Accessory Use Conditions:

(1) General Conditions

(a) An accessory building erected as an integral part of the principal building shall be made structurally a part thereof, shall have a common wall therewith, and shall comply with the requirements applicable to the principal building.

(b) A detached accessory building shall not be located in the front or side yard or encroach upon a minimum building setback line, but this limitation shall not apply to garages and carports, provided the minimum required front yard or side yard set back line is observed.

(c) Within the rear yard, a detached accessory building shall be located at least five feet from interior lot line.

(2) Signs for residential uses and community services of Use Unit 4 are permitted as follows in accordance with the yard requirement of Section 153.024(B)(5). Office and business signs are permitted in accordance with Use Unit 21 (excluding outdoor advertising or off-premises signs).

(a) One Bulletin Board may be erected on each street frontage of any educational, religious, institutional, or similar use in Use Unit 4 by Special Exception or other uses by Special Exception requiring announcement of its activities. The Bulletin Board shall not exceed twelve (12) square feet in surface area, nor fifteen (15) feet in height, and illumination, if any, shall be by constant light.

(b) One Identification Sign may be erected on each perimeter street frontage of a single-family detached subdivision, townhouse development, duplex structure, quadruplex development, multifamily-family development or permitted non- residential use. The sign shall not be permitted to exceed forty-eight (48) square feet of display surface area. The sign shall not exceed twelve (12) feet in height, and illumination, if any, shall be by constant light.

(c) During the period of construction, a temporary sign advertising the construction of improvements on the street premises, may be erected on each perimeter street frontage of the development. The sign shall not exceed forty (40) square feet in surface area, nor fifteen (15) feet in height, and illumination, if any, shall be by constant light.

(d) A temporary Real Estate Sign advertising the sale, rental, or lease of the premises may be erected on each street frontage of a lot. The sign shall not exceed eight (8) square feet in surface area, nor fifteen (15) feet in height, and illumination, if any, shall be by constant light.

(3) Private swimming pools (and all accessories thereto) shall meet safety requirements of State and local building codes.

(4) Child Care - In Home:

(a) A maximum of four (4) non-related children may be cared for in the home without State Licensing. Five (5) to ten (10) children may be cared for in the home if the resident obtains a Special Exception and maintains continuous State Licensing. This number does not include those who reside in the residence.

(b) No person shall be employed other than a member of the immediate family residing on the premises or a substitute caregiver if the primary caregiver is unavailable.

(c) No signs advertising the Child Care Home shall be permitted on the lot.

(d) No exterior alteration of the dwelling or any customary accessory structure shall be made which would detract from the residential character of the structures.

(e) State-licensed child-care homes in existence on the effective date of this ordinance, but which would be prohibited by these requirements, may continue as otherwise regulated herein.

(5) Yard sales on residential lots shall occur only once a month for not more than three (3) consecutive days.

153.087 BULK AND AREA REQUIREMENTS – B-2 or CG COMMERCIAL GENERAL DISTRICT

(A) Area. Every lot upon which a structure is hereafter erected shall front onto a dedicated street or public right-of-way and shall conform to the following minimum lot area and width requirements:

(1) Residential Use:

(a) The tract area shall be a minimum of ten thousand (10,000) square feet with a minimum tract width of one hundred (100) feet (where sanitary sewers are available) for single-family detached and single-family attached uses. For a quadruplex, (four units with two common walls), the minimum tract area is fourteen thousand 14,000) square feet. For multiple family uses and “group quarters” uses (Use Unit 7), the minimum tract area ten thousand (10,000) square feet with a minimum tract width of one hundred (100) feet.

(b) It is assumed that there is a minimum of four townhouses per structure with a 100-foot tract width; thus, the minimum lot width is twenty (20) feet (with public sewers) for townhouses. Therefore, the interior lots of the four townhouses has a minimum lot area of two thousand (2,000) square feet and the exterior townhouse lots are a minimum of three thousand (3,000) square feet.

(c) It is assumed that there are two units per structure in a duplex with a 100-foot tract width; thus, the minimum lot width is fifty (50) feet (with public sewers) with one common wall for duplexes. Therefore, the minimum lot area is five thousand (5,000) square feet. per dwelling unit (where sanitary sewers are available).

(d) It is assumed that there are four units per structure in a quadruplex with a 100-foot tract width; thus, the minimum lot width is fifty (50) feet (with public sewers) for a quadruplex with two common walls. Therefore, the minimum lot area is five thousand (5,000) square feet per dwelling unit (where sanitary sewers are available).

(e) Where no sanitary sewers are available and disposal is by soil absorption, the minimum lot area shall be one (1) acre per single-family detached dwelling and one (1) acre per duplex structure. The lot size for townhouse, quadruplex, multi-family structures and “group quarters” (Use Unit 7) structures shall not be less than one (1) acre, and the Posey County Health Department may require a larger lot size. For all residential uses, the Posey County Health Department may require a larger lot for any type of residential use.

(2) Non-Residential Use:

(a) The lot area shall be at least ten thousand (10,000) square feet with a minimum width of one hundred (100) feet.

(b) Where no sanitary sewers are available and disposal is by soil absorption, minimum lot of the area shall be one (1) acre. The Posey County Health Department may require a larger lot.

(B) Yards.

(1) Front Yard and Street Side Yard:

(a) Every lot or tract shall have a front yard (or street side yard) not less than ten (10) feet in depth proposed structure falls between two developed lots, the front yard setback should be the average of the two abutting lot structure setbacks.

(b) When a B or C District abuts an O or R District, the front yard requirements of the O or R District should be observed for 200 feet into the B or C District (except the CBD). When a B or C District abuts an O or R District, off-street parking is prohibited in the front and street side yards; however, off-street parking would be permitted in front and street side yards greater than 10 feet provided the side yards are landscaped to hide the parking area and the parking area does not extend into the first 10 feet of the front or street side yard. The front yard and street side yard requirements of the B and C District may be reduced to none if adjacent lots or the majority of the lots on the blockface have no front yard or street side yard setback.

(c) If there is no dedicated roadway right-of-way, the front yard (or corner lot side yard) setback from the center of the roadway is twenty-five (25) feet plus one-half the right-of-way width of the applicable roadway functional class as if the roadway had been dedicated (adding 25 feet for a "local street," 40 feet for a "collector" or "secondary arterial," 60 feet for a "primary arterial," and 75 feet for a "divided primary arterial").

(2) SIDE YARD:

(a) Every lot shall have a side yard not less than ten (10) feet in depth.

(b) The interior lot (or unit) of a townhouse structure with two common walls has no side yard requirement. The adjoining lots of a duplex with one common wall or adjoining lots of a zero lot-line development have no side yard requirement. The adjoining portion of lots of quadruplex structure with two common walls has no side yard requirements.

(c) When a B or C District (except CBD) abuts an R-3, RM, O or R-O District, the side yard requirement is 20 feet, but may be reduced to 10 feet if landscaped. When a B or C District (except the CBD) abuts an R-1, RS, RT or R-2 District, the minimum side yard requirement is 20 feet, and is to be increased one additional foot for each foot of building height exceeding 28 feet and cannot be reduced by landscaping.

(3) Rear Yard:

(a) Every lot or tract shall have a rear yard of not less than twenty (20) feet in depth. For a quadruplex, the rear yard must be observed for the tract holding the quadruplex structure, but is not observed for the adjoining portion of lots where a common wall exists between abutting units.

(b) When a B or C District (except the CBD) abuts an R-1, RS, RT or R-2 District, the minimum rear yard requirement of 20 feet is to be increased one additional foot for each foot of building height exceeding 28 feet and cannot be reduced by landscaping.

(C) Height: No building or structure, or part thereof, shall be erected or altered to a height exceeding four (4) stories, not to exceed seventy-five (75) feet.

(D) Lot Coverage: For residential uses on individual lots or tracts not mixed with office or commercial uses, the combined area occupied by all principal and accessory buildings shall not exceed fifty percent (50%) of the area of the lot.

(E) Minimum Floor Area:

(1) Minimum livable floor area for a single-family detached dwelling unit shall be nine hundred and fifty (950) square feet and a minimum of twenty-three (23) feet wide.

(2) Minimum livable floor area for a single-family attached (townhouse, duplex, zero lot-line or

quadruplex) shall be six hundred and fifty (650) square feet per dwelling unit, total of one thousand nine hundred fifty (1,950) square feet for a townhouse structure (assuming three units) total one thousand three hundred (1300) square feet per duplex structure (two units) total of six hundred and fifty (650) square feet per zero lot-line unit, and total of two thousand six hundred (2,600) square feet per quadruplex structure (four units).

(3) Minimum livable floor area for a multiple-family dwelling shall be four hundred (400) square feet for an efficiency apartment, five hundred (500) square feet for a one-bedroom apartment, six hundred (600) square feet for a two-bedroom apartment, and seven hundred (700) for a three-bedroom apartment.

(F) Minimum Lot Area per Dwelling Unit: For residential uses on individual lots or tracts not mixed with office or commercial uses, the minimum lot area per dwelling unit shall be one thousand five hundred (1,500) square feet for multiple family uses and other residential uses in the Use Unit 7 containing multiple dwelling units.

(G) Floor Area Ratio: The floor area ratio shall not exceed 0.75.

(H) Dwelling Unity Density: The maximum number of dwelling units per acre is 29.04.

153.088 USE REGULATIONS – B-3 or CH COMMERCIAL HIGH INTENSITY DISTRICT

(A) Use by Right. The principal uses permitted in the Commercial High Intensity Districts are designed by Use Units. These units are groupings of individual uses and are fully described, including their respective off-street parking, loading, and screening requirements and other use conditions in Sections 153.141 to 153.173. No building or structure, or part thereof, shall be erected, altered, or used, or land used in whole or in part for other than one or more of the following specified permitted principal uses in accordance with the limitations herein-after specified:

(1) Use Unit 1 – Areawide Uses by Right

(2) Use Unit 3 – Public Protection and Utility Facilities

(3) Use Unit 4 – Community Services [including protective shelters, residential treatment centers and transitional living centers; and including Children's Nursery/Day Care Center for more than 4 unrelated children (excluding those who live in the home)].

(4) Use Unit 5 – Single-Family Detached Dwelling

(5) Use Unit 6 – Single-Family Attached Dwelling (including townhouses, duplex, zero lot-line, quadruplexes)

(6) Use Unit 7 – Multiple Family Dwelling (including "group quarters" uses, but excluding funeral homes, hotels and motels)

(7) Use Unit 8 – Manufactured or Modular Home Dwelling

(8) Use Unit 10 – Off-Street Parking Areas

(9) Use Unit 11 – Offices and Studios

(10) Use Unit 12 – Entertainment and Eating Establishments

(11) Use Unit 13 – Convenience Goods and Services

(12) Use Unit 14 – Shopping Goods and Services

(13) Use Unit 15 – Other Trades and Services (sexually oriented businesses only by Special Exception)

(14) Use Unit 16 -- Gasoline Service Stations

(15) Use Unit 17 – Automotive and Allied Activities

(16) Use Unit 18 – Drive-In Restaurants

(17) Use Unit 19 – Hotel, Motel and Recreation Facilities

(18) Use Unit 21 – Business Signs and Outdoor Advertising

(19) Use Unit 23 – Warehousing and Wholesaling

(20) Use Unit 28 – Home Occupations

(21) Other Uses: Other uses or enterprises similar to the above, which in the judgment of the Area Plan Commission Board or Board of Zoning Appeals are similar to and not more objectionable to the general welfare, than the uses listed. Other uses so determined shall be regarded as listed uses. In no instance, however, shall the Area Plan Commission Board or Board of Zoning Appeals determine nor the regulations be so interpreted, that a use shall be permitted in a district where such use is specifically listed as first permissible in a less restricted district or where such use is permitted by Special Exception in this district.

(22) Use Unit 29-Mobile Office Trailer, so long as property does not abut a residential district. (as amended Mt.Vernon 5-16-13, Cynthiana 5-14-13, Poseyville 5-8-13, County 5-7-13)

(B) Use by Special Exception. Special Exception Uses may be permitted by the Board of Zoning Appeals following a public hearing, as indicated below, when such are deemed essential or desirable to the public convenience or welfare and are in harmony with the various elements or objectives of the Comprehensive Plan:

(1) Use Unit 2 – Areawide Special Exception Uses

(2) Use Unit 15 – Sexually Oriented Businesses

(3) Use Unit 20 – Commercial Recreation: Intensive (as amended 10/16/02 Posey County, 11/01/12 Mt. Vernon, 11/13/12 Cynthiana, 11/14.2012 Poseyville)

(4) Use Unit 22 – Research and Development

(5) Use Unit 25 – Light Manufacturing

(6) Use Unit 29-Mobile Office Trailer when property abuts a residential district. (as amended Mt.Vernon 5-16-13, Cynthiana 5-14-13, Poseyville 5-8-13, County 5-7-13)

(C) Limitations on Uses by Right and Special Exception:

(1) All activities including sales, display, preparations and storage shall be conducted entirely within a completely enclosed building except:

(a) Accessory parking lots and service stations.

(b) Retail stores in Use Units 14 and 15 involving the sale or rental of building materials, lawn and garden equipment, lumber, shrubs, trees and flowers.

(c) Uses in Use Unit 17 (automobile and allied products).

(d) Uses that may be permitted by the Board of Zoning Appeals in granting a Special Exception.

(2) All products shall be sold as retail on the premises.

(3) All on-site lighting shall be directed toward the structures on-site and away from any neighboring residential districts. Areawide loudspeakers or paging systems will not be allowed.

(4) Sexually Oriented Business:

(a) No person shall cause or permit the establishment of any sexually-oriented businesses as defined in 153.270 unless that business is specifically approved as a Special Exception by the board of Zoning Appeals. This business may be established only within those conditions set by the Board of Zoning Appeals. (See section 153.246(C)(4).

(b) The terminology "establishment of a sexually oriented business" shall be defined to include within its meaning the opening of such business as a new business, the relocation of such business, the enlargement of such business in either scope or area, and/or the conversion of an existing business location to any of the sexually oriented uses as defined in Section 153.270.

(D) Accessory Uses Permitted. Those accessory uses which are customarily incidental to a principal permitted use are as follows:

(1) Management office, private recreation, laundry, and storage facilities for Use Unit 7 (Multiple Family Dwelling).

(2) Garage

(3) Carport

(4) Signs:

(a) Business Signs in Use Unit 21 (see Use Unit 21 for permitted business signs)

(b) Bulletin Board

(c) Identification Sign

(d) Real Estate Sign

(e) Construction Sign

(5) Shelter (storm)

(6) Private swimming pool

(7) Child care in Home (4 or less)

(8) Yard sales on residential lots.

(E) Accessory Use Conditions:

(1) General Conditions:

(a) An accessory building erected as an integral part of the principal building shall be made structurally a part thereof, shall have a common wall therewith, and shall comply with the requirements applicable to the principal building.

(b) A detached accessory building shall not be located in the front or side yard or encroach upon a minimum building setback line, but this limitation shall not apply to garages and carports, provided the minimum required front yard or side yard set back line is observed.

(c) Within the rear yard, a detached accessory building shall be located at least five feet from interior lot line.

(2) Signs for residential uses and community services of Use Unit 4 are permitted as follows in

accordance with the yard requirement of Section 153.024(B)(5). Office and business signs are permitted in accordance with Use Unit 21 (excluding outdoor advertising or off-premises signs).

(a) One Bulletin Board may be erected on each street frontage of any educational, religious, institutional, or similar use in Use Unit 4 by Special Exception or other uses by Special Exception requiring announcement of its activities. The Bulletin Board shall not exceed twelve (12) square feet in surface area, nor fifteen (15) feet in height, and illumination, if any, shall be by constant light.

(b) One Identification Sign may be erected on each perimeter street frontage of a single-family detached subdivision, townhouse development, duplex structure, quadruplex development, multifamily-family development or permitted non- residential use. The sign shall not be permitted to exceed forty-eight (48) square feet of display surface area. The sign shall not exceed twelve (12) feet in height, and illumination, if any, shall be by constant light.

(c) During the period of construction, a temporary sign advertising the construction of improvements on the street premises, may be erected on each perimeter street frontage of the development. The sign shall not exceed forty (40) square feet in surface area, nor fifteen (15) feet in height, and illumination, if any, shall be by constant light.

(d) A temporary Real Estate Sign advertising the sale, rental, or lease of the premises may be erected on each street frontage of a lot. The sign shall not exceed eight (8) square feet in surface area, nor fifteen (15) feet in height, and illumination, if any, shall be by constant light.

(3) Private swimming pools (and all accessories thereto) shall meet safety requirements of State and local building codes.

(4) Child Care - In Home:

(a) A maximum of four (4) non-related children may be cared for in the home without State Licensing. Five (5) to ten (10) children may be cared for in the home if the resident obtains a Special Exception and maintains continuous State Licensing. This number does not include those who reside in the residence.

(b) No person shall be employed other than a member of the immediate family residing on the premises or a substitute caregiver if the primary caregiver is unavailable.

(c) No signs advertising the Child Care Home shall be permitted on the lot.

(d) No exterior alteration of the dwelling or any customary accessory structure shall be made which would detract from the residential character of the structures.

(e) State-licensed child-care homes in existence on the effective date of this ordinance, but which would be prohibited by these requirements, may continue as otherwise regulated herein.

(5) Yard sales on residential lots shall occur only once a month for not more than three (3) consecutive days.

153.089 BULK AND AREA REQUIREMENTS – B-3 or CH COMMERCIAL HIGH INTENSITY DISTRICT

(A) Area. Every lot upon which a structure is hereafter erected shall front onto a dedicated street or public right-of-way and shall conform to the following minimum lot area and width requirements:

(1) Residential Use:

(a) The tract area shall be a minimum of ten thousand (10,000) square feet with a minimum tract width of one hundred (100) feet (where sanitary sewers are available) for single-family detached and single-family attached uses. For a quadruplex, (four units with two common walls), the minimum tract area is fourteen thousand 14,000) square feet. For multiple family uses and “group quarters” uses (Use Unit 7), the minimum tract area ten thousand (10,000) square feet with a minimum tract width of one hundred (100) feet.

(b) It is assumed that there is a minimum of four townhouses per structure with a 100-foot tract width; thus, the minimum lot width is twenty (20) feet (with public sewers) for townhouses. Therefore, the interior lot of the three townhouses has a minimum lot area of two thousand (2,000) square feet and the

exterior townhouse lots are a minimum of three thousand (3,000) square feet.

(c) It is assumed that there are two units per structure in a duplex with a 100-foot tract width; thus, the minimum lot width is fifty (50) feet (with public sewers) with one common wall for duplexes. Therefore, the minimum lot area is five thousand (5,000) square feet per dwelling unit (where sanitary sewers are available).

(d) It is assumed that there are four units per structure in a quadruplex with a 100-foot tract width; thus, the minimum lot width is fifty (50) feet (with public sewers) for a quadruplex with two common walls. Therefore, the minimum lot area is five thousand (5,000) square feet per dwelling unit (where sanitary sewers are available).

(e) Where no sanitary sewers are available and disposal is by soil absorption, the minimum lot area shall be one (1) acre per single-family detached dwelling and one (1) acre per duplex structure. The lot size for townhouse, quadruplex, multi-family structures and "group quarters" (Use Unit 7) structures shall not be less than one (1) acre, and the Posey County Health Department may require a larger lot size. For all residential uses, the Posey County Health Department may require a larger lot for any type of residential use.

(2) Non-Residential Use:

(a) The lot area shall be at least ten thousand 10,000) square feet with a minimum width of one hundred (100) feet.

(b) Where no sanitary sewers are available and disposal is by soil absorption, minimum lot of the area shall be one (1) acre. The Posey County Health Department may require a larger lot. .

(B) Yards.

(1) Front Yard and Street Side Yard:

(a) Every lot or tract shall have a front yard (or street side yard) not less than ten (10) feet in depth proposed structure falls between two developed lots, the front yard setback should be the average of the two abutting lot structure setbacks.

(b) When a B or C District abuts an O or R District, the front yard requirements of the O or R District should be observed for 200 feet into the B or C District (except the CBD). When a B or C District abuts an O or R District, off-street parking is prohibited in the front and street side yards; however, off-street parking would be permitted in front and street side yards greater than 10 feet provided the side yards are landscaped to hide the parking area and the parking area does not extend into the first 10 feet of the front or street side yard. The front yard and street side yard requirements of the B and C District may be reduced to none if adjacent lots or the majority of the lots on the blockface have no front yard or street side yard setback.

(c) If there is no dedicated roadway right-of-way, the front yard (or corner lot side yard) setback from the center of the roadway is twenty-five (25) feet plus one-half the right-of-way width of the applicable roadway functional class as if the roadway had been dedicated (adding 25 feet for a "local street," 40 feet for a "collector" or "secondary arterial," 60 feet for a "primary arterial," and 75 feet for a "divided primary arterial").

(2) SIDE YARD:

(a) Every lot shall have a side yard not less than ten (10) feet in depth.

(b) The interior lot (or unit) of a townhouse structure with two common walls has no side yard requirement. The adjoining lots of a duplex with one common wall or adjoining lots of a zero lot-line development have no side yard requirement. The adjoining portion of lots of quadruplex structure with two common walls has no side year requirements.

(c) When a B or C District (except CBD) abuts an R-3, RM, O or R-O District, the side yard requirement is 20 feet, but may be reduced to 10 feet if landscaped. When a B or C District (except the CBD) abuts an R-1, RS, RT or R-2 District, the minimum side yard requirement is 20 feet, and is to be increased one additional foot for each foot of building height exceeding 28 feet and cannot be reduced by landscaping.

(3) Rear Yard:

(a) Every lot or tract shall have a rear yard of not less than twenty (20) feet in depth. For a quadruplex, the rear yard must be observed for the tract holding the quadruplex structure, but is not observed for the adjoining portion of lots where a common wall exists between abutting units.

(b) When a B or C District (except the CBD) abuts an R-1, RS, RT or R-2 District, the minimum rear yard requirement of 20 feet is to be increased one additional foot for each foot of building height exceeding 28 feet and cannot be reduced by landscaping.

(C) Height: No building or structure, or part thereof, shall be erected or altered to a height exceeding four (4) stories, not to exceed seventy-five (75) feet.

(D) Lot Coverage: For residential uses on individual lots or tracts not mixed with office or commercial uses, the combined area occupied by all principal and accessory buildings shall not exceed fifty percent (50%) of the area of the lot.

(E) Minimum Floor Area:

(1) Minimum livable floor area for a single-family detached dwelling unit shall be nine hundred and fifty (950) square feet and a minimum of twenty-three (23) feet wide.

(2) Minimum livable floor area for a single-family attached (townhouse, duplex, zero lot-line or quadruplex) shall be six hundred and fifty (650) square feet per dwelling unit, total of one thousand nine hundred fifty (1,950) square feet for a townhouse structure (assuming three units) total one thousand three hundred (1300) square feet per duplex structure (two units) total of six hundred and fifty (650) square feet per zero lot-line unit, and total of two thousand six hundred (2,600) square feet per quadruplex structure (four units).

(3) Minimum livable floor area for a multiple-family dwelling shall be four hundred (400) square feet for an efficiency apartment, five hundred (500) square feet for a one-bedroom apartment, six hundred (600) square feet for a two-bedroom apartment, and seven hundred (700) for a three-bedroom apartment.

(F) Minimum Lot Area per Dwelling Unit: For residential uses on individual lots or tracts not mixed with office or commercial uses, the minimum lot area per dwelling unit shall be one thousand five hundred (1,500) square feet for multiple family uses and other residential uses in the Use Group 7 containing multiple dwelling units.

(G) Floor Area Ratio: The floor area ratio shall not exceed 1.00.

(H) Dwelling Unit Density: The maximum number of dwelling units per acre is 29.04.

153.090 USE REGULATIONS – CBD CENTRAL BUSINESS DISTRICT

(A) Use by Right. The principal uses permitted in the Central Business District are designed by Use Units. These units are groupings of individual uses and are fully described, including their respective off-street parking, loading, and screening requirements and other use conditions in Sections 153.141 to 153.173. However, land uses in the Central Business District are exempt from off-street parking and off-street loading berth requirements. No building or structure, or part thereof, shall be erected, altered, or used, or land used in whole or in part for other than one or more of the following specified permitted principal uses in accordance with the limitations herein-after specified:

(1) Use Unit 1 – Areawide Uses by Right

(2) Use Unit 3 – Public Protection and Utility Facilities

(3) Use Unit 4 – Community Services [including protective shelters, residential treatment centers and transitional living centers; and including Children's Nursery/Day Care Center for more than 4 unrelated children (excluding those who live in the home)].

(4) Use Unit 6 – Single-Family Attached Dwelling (including townhouses, duplex, zero lot-line, quadruplexes)

(5) Use Unit 7 – Multiple Family Dwelling (including "group quarters" uses, but excluding funeral homes, hotels and motels)

(6) Use Unit 8 – Manufactured or Modular Home Dwelling

(7) Use Unit 10 – Off-Street Parking Areas

(8) Use Unit 11 – Offices and Studios

(9) Use Unit 12 – Entertainment and Eating Establishments

(10) Use Unit 13 – Convenience Goods and Services

(11) Use Unit 14 – Shopping Goods and Services

(12) Use Unit 19 – Hotel, Motel and Recreation Facilities

(13) Use Unit 28 – Home Occupations

(14) Use Unit 29-Mobile Office Trailer, so long as property does not abut a residential district. (as amended Mt.Vernon 5-16-13, Cynthiana 5-14-13, Poseyville 5-8-13, County 5-7-13)

(B) Use by Special Exception. Special Exception Uses may be permitted by the Board of Zoning Appeals following a public hearing, as indicated below, when such are deemed essential or desirable to the public convenience or welfare and are in harmony with the various elements or objectives of the Comprehensive Plan:

(1) Use Unit 2 – Areawide Special Exception Uses

(2) Use Unit 5 – Single-Family Detached Dwelling

(3) Use Unit 15 – Other Trades and Services (excluding sexually oriented businesses)

(4) Use Unit 16 -- Gasoline Service Stations

(5) Use Unit 17 – Automotive and Allied Activities

(6) Use Unit 18 – Drive-In Restaurants

(7) Use Unit 20 – Commercial Recreation: Intensive

(8) Part Use Unit 21 – Business Signs and Outdoor Advertising – excluding outdoor advertising (off-premises) signs

(9) Use Unit 23 – Warehousing and Wholesaling

(10) Use Unit 29-Mobile Office Trailer when property abuts a residential district. (as amended Mt.Vernon 5-16-13, Cynthiana 5-14-13, Poseyville 5-8-13, County 5-7-13)

(C) Limitations on Uses by Right and Special Exception:

(1) Except for accessory parking lots and service stations, all activities including sales, display, preparations and storage shall be conducted entirely within a completely enclosed building. (Except those that may be permitted by the Board of Zoning Appeals in granting a Special Exception.)

(2) All products shall be sold as retail on the premises.

(3) All on-site lighting shall be directed toward the structures on-site and away from any neighboring

residential districts. Areawide loudspeakers or paging systems will not be allowed.

(D) Accessory Uses Permitted. Those accessory uses which are customarily incidental to a principal permitted use are as follows:

(1) Management office, private recreation, laundry, and storage facilities for Use Unit 7 (Multiple Family Dwelling)

(2) Garage

(3) Carport

(4) Signs:

(a) Business Signs in Use Unit 21 (see Use Unit 21 for permitted business signs)

(b) Bulletin Board

(c) Identification Sign

(d) Real Estate Sign

(e) Construction Sign

(5) Shelter (storm)

(6) Private swimming pool

(7) Child care in Home (4 or less)

(8) Yard sales on residential lots.

(E) Accessory Use Conditions:

(1) General Conditions:

(a) An accessory building erected as an integral part of the principal building shall be made structurally a part thereof, shall have a common wall therewith, and shall comply with the requirements applicable to the principal building.

(b) A detached accessory building shall not be located in the front or side yard or encroach upon a minimum building setback line, but this limitation shall not apply to garages and carports, provided the minimum required front yard or side yard set back line is observed.

(c) Within the rear yard, a detached accessory building shall be located at least five feet from interior lot line.

(2) Signs for residential uses and community services of Use Unit 4 are permitted as follows in accordance with the yard requirement of Section 153.024(B)(5). Office and business signs are permitted in accordance with Use Unit 21 (excluding outdoor advertising or off-premises signs).

(a) One Bulletin Board may be erected on each street frontage of any educational, religious, institutional, or similar use in Use Unit 4 by Special Exception or other uses by Special Exception requiring announcement of its activities. The Bulletin Board shall not exceed twelve (12) square feet in surface area, nor fifteen (15) feet in height, and illumination, if any, shall be by constant light.

(b) One Identification Sign may be erected on each perimeter street frontage of a single-family detached subdivision, townhouse development, duplex structure, quadruplex development, multifamily-family development or permitted non- residential use. The sign shall not be permitted to exceed forty-eight (48) square feet of display surface area. The sign shall not exceed twelve (12) feet in height, and illumination, if any, shall be by constant light.

(c) During the period of construction, a temporary sign advertising the construction of improvements on the street premises, may be erected on each perimeter street frontage of the development. The sign shall not exceed forty (40) square feet in surface area, nor fifteen (15) feet in height, and illumination, if any, shall be by constant light.

(d) A temporary Real Estate Sign advertising the sale, rental, or lease of the premises may be erected on each street frontage of a lot. The sign shall not exceed eight (8) square feet in surface area, nor fifteen (15) feet in height, and illumination, if any, shall be by constant light.

(3) Private swimming pools (and all accessories thereto) shall meet safety requirements of State and local building codes.

(4) Child Care - In Home:

(a) A maximum of four (4) non-related children may be cared for in the home without State

Licensing. Five (5) to ten (10) children may be cared for in the home if the resident obtains a Special Exception and maintains continuous State Licensing. This number does not include those who reside in the residence.

(b) No person shall be employed other than a member of the immediate family residing on the premises or a substitute caregiver if the primary caregiver is unavailable.

(c) No signs advertising the Child Care Home shall be permitted on the lot.

(d) No exterior alteration of the dwelling or any customary accessory structure shall be made which would detract from the residential character of the structures.

(e) State-licensed child-care homes in existence on the effective date of this ordinance, but which would be prohibited by these requirements, may continue as otherwise regulated herein.

(5) Yard sales on residential lots shall occur only once a month for not more than three (3) consecutive days.

153.091 BULK AND AREA REQUIREMENTS – CBD CENTRAL BUSINESS DISTRICT

(A) Area: Every lot upon which a structure is hereafter erected shall front onto a dedicated street or public right-of-way, shall be served by sanitary sewers, and shall conform to the following minimum lot area and width requirements:

(1) There is no minimum lot area or width or tract area or width in the CBD.

(B) Yards: There are no yard requirements for the CBD.

(C) Height: No building or structure, or part thereof, shall be erected or altered to a height exceeding four (4) stories, not to exceed seventy-five (75) feet, unless a Special Exception is approved by the Board of Zoning Appeals.

(D) Lot Coverage: The combined area occupied by all principal and accessory buildings may be one hundred percent (100%) of the area of the lot.

(E) Minimum Floor Area:

(1) Minimum livable floor area for a single-family detached dwelling unit shall be nine hundred and fifty (950) square feet and a minimum of twenty-three (23) feet wide.

(2) Minimum livable floor area for a single-family attached (townhouse, duplex, zero lot-line or quadruplex) shall be six hundred and fifty (650) square feet per dwelling unit, total of one thousand nine hundred fifty (1,950) square feet for a townhouse structure (assuming three units) total one thousand three hundred (1300) square feet per duplex structure (two units) total of six hundred and fifty (650) square feet per zero lot-line unit, and total of two thousand six hundred (2,600) square feet per quadruplex structure (four units).

(3) Minimum livable floor area for a multiple-family dwelling shall be four hundred (400) square feet for an efficiency apartment, five hundred (500) square feet for a one-bedroom apartment, six hundred (600) square feet for a two-bedroom apartment, and seven hundred (700) for a three-bedroom apartment.

(F) Minimum Lot Area per Dwelling Unit: For residential uses on individual lots or tracts not mixed with office or commercial uses, the minimum lot area per dwelling unit shall be one thousand five hundred (1,500) square feet for multiple family uses and other residential uses in the Use Group 7 containing multiple dwelling units.

(G) Floor Area Ratio: The floor area ratio shall not exceed 4.00 unless a Special Exception is approved by the Board of Zoning Appeals.

(H) Dwelling Unit Density: The maximum number of dwelling units per acre is 29.04.

153.092 SITE DEVELOPMENT PLAN REVIEW FOR ALL BUSINESS AND COMMERCIAL DISTRICTS.

(A) Purpose:

(1) By reason of potential adverse effects on public services or to neighboring land uses, site plan

review and approval is required for all commercial developments for the purposes of assuring proper accessibility, circulation, functional relationships of uses, and compatibility with adjoining and nearby development. No building permit shall be issued nor use commenced within this development except in accordance with an approved site development plan in accordance with Section 153.223.

153.100 MANUFACTURING DISTRICT PROVISIONS

153.101 PURPOSE

(A) General Purposes. The Manufacturing Districts are designed to:

(1) Achieve the manufacturing objectives of the Comprehensive Plan;

(2) Meet the needs for industrial services and goods of Posey County;

(3) Preserve and promote the development of efficient industrial areas and to minimize the adverse effects of industrial uses on other land uses and thoroughfares by:

(a) Differentiating the types and purposes of industrial activities.

(b) Establishing bulk and area controls.

(c) Requiring off-street loading and parking facilities.

(d) Controlling the number, area, location, and types of signs.

(e) Protecting the character of industrial districts and their peculiar suitability for manufacturing use.

(B) Purposes of the M-1 -- Light Manufacturing and Research and Development District. The M-1 District is designed to provide an environment conducive to the development and conservation of modern manufacturing and scientific research facilities. Additionally, it is to provide areas suitable for manufacturing, wholesaling, warehousing, and other industrial activities which have no objectionable environmental influences. All activities and storage are to be entirely within a completely enclosed building.

(C) Purposes of the M-2 -- Medium Manufacturing District. The M-2 District is designed to group together a wide range of industrial uses which may produce moderately objectionable environmental influences in their operation and appearance. All processes and activities are to be within an enclosed building; while outdoor storage is permitted, it must be completely screened from the public right-of-way and abutting properties (unless permitted through a use requiring a Special Exception approved by the Board of Zoning Appeals).

(D) Heavy Manufacturing -- Heavy manufacturing generally involve the conversion of raw materials to products; processes often entail nuisances such as light, noise, vibration, fumes, and raw materials and products are delivered and shipped by a variety of transportation modes (truck, train and barge). Further, processes may not be fully enclosed within a building; and, while visually screened to the extent possible, raw material storage and final products may prove difficult to fully screen due to their size and height. Because a unique zoning district does not exist for heavy manufacturing uses, these uses are permitted in the M-2 Medium Manufacturing District by Special Exception approved by the Board of Zoning Appeals.

153.102 USE REGULATIONS – M-1 Light Manufacturing District

(A) Use by Right. The principal uses permitted in the M-1 Light Manufacturing District are designed by Use Units. The Use Units are groupings of individual uses and are fully described, including their respective off-street parking, loading, and screening requirements and other use conditions in Sections 153.141 to 153.173. The Use Units permitted in the M-1 Light Manufacturing District are set forth below:

(1) Use Unit 1 – Areawide Uses by Right

(2) Use Unit 3 – Public Protection and Utility Facilities

(3) Use Unit 10 – Off-Street Parking Areas

(4) Use Unit 11 – Offices and Studios

(5) Use Unit 15 – Other Trades and Services (sexually oriented uses only by Special Exception)

(6) Use Unit 16 -- Gasoline Service Stations

(7) Use Unit 17 – Automotive and Allied Activities

(8) Use Unit 21 – Business Signs and Outdoor Advertising

(9) Use Unit 22 – Research and Development

(10) Use Unit 23 – Warehousing and Wholesaling

(11) Use Unit 25 – Light Manufacturing

(12) Other Uses: Other uses or enterprises similar to the above, which in the judgment of the Area Plan Commission Board or Board of Zoning Appeals are similar to and not more objectionable to the general welfare, than the uses listed. Other uses so determined shall be regarded as listed uses. In no instance, however, shall the Area Plan Commission Board or Board of Zoning Appeals determine nor the regulations be so interpreted, that a use shall be permitted in a district where such use is specifically listed as first permissible in a less restricted district or where such use is permitted by Special Exception in this district.

(13) Use Unit 29-Mobile Office Trailer, so long as property does not abut a residential district. (as amended Mt.Vernon 5-16-13, Cynthiana 5-14-13, Poseyville 5-8-13, County 5-7-13)

(B) Use by Special Exception. Special Exception Uses may be permitted by the Board of Zoning Appeals following a public hearing, as indicated below, when such are deemed essential or desirable to the public convenience or welfare and are in harmony with the various elements or objectives of the Comprehensive Plan:

(1) Use Unit 2 – Areawide Special Exception Uses

(2) Use Unit 4 – Community Services [excluding protective shelters, treatment centers, and transitional living centers, but including Children's Nursery/Day Care Center for more than 4 unrelated children (excluding those who live in the home)].

(3) Use Unit 12 – Entertainment and Eating Establishments

(4) Use Unit 13 – Convenience Goods and Services

(5) Use Unit 14 – Shopping Goods and Services

(6) Use Unit 15 – Sexually Oriented Businesses

(7) Use Unit 18 – Drive-In Restaurants

(8) Use Unit 19 – Hotel, Motel and Recreation Facilities

(9) Use Unit 20 – Commercial Recreation: Intensive

(10) Use Unit 29-Mobile Office Trailer when property abuts a residential district. (as amended Mt.Vernon 5-16-13, Cynthiana 5-14-13, Poseyville 5-8-13, County 5-7-13)

(C) Limitations on Uses by Right and Special Exception:

(1) All activities including sales, display, preparations and storage shall be conducted entirely within a completely enclosed building except:

(a) Accessory parking lots and service stations.

(b) Retail stores in Use Units 14 and 15 involving the sale or rental of building materials, lawn and garden equipment, lumber, shrubs, trees and flowers.

(c) Uses in Use Unit 17 (automobile and allied products).

(d) Uses that may be permitted by the Board of Zoning Appeals in granting a Special Exception.

(2) All products shall be sold as retail on the premises.

(3) All on-site lighting shall be directed toward the structures on-site and away from any neighboring residential districts.

(4) Sexually Oriented Business

(a) No person shall cause or permit the establishment of any sexually oriented businesses as defined in 153.270 unless that business is specifically approved as a Special Exception by the Board of Zoning Appeals. This business may be established only within those conditions set by the Board of Zoning Appeals. (See section 153.246(C)(4).

(b) The terminology "establishment of a sexually oriented business" shall be defined to include within its meaning the opening of such business as a new business, the relocation of such business, the enlargement of such business in either scope or area, and/or the conversion of an existing business location to any of the sexually oriented uses as defined in Section 153.270.

(D) Accessory uses permitted. Those accessory uses which are customarily incidental to a permitted principal use are also permitted in the M-2 Districts.

(E) Accessory Use Conditions.

(1) Accessory buildings shall meet the minimum building setback lines of the applicable district.

(2) An accessory building which is erected as an integral part of the principal building shall be structurally a part thereof. The accessory building shall have a common wall therewith, and shall comply with the requirements applicable to the principal building.

(3) Accessory storage of materials, equipment, or products within two hundred (200) feet of an abutting R District shall be screened by the erection of a screening wall or fence along the lot line or lines in common with the abutting R District.

(4) Signs in the Manufacturing Districts, whether accessory or principal uses, are subject to the use conditions set forth in Use Unit 21.

153.103 BULK AND AREA REQUIREMENTS– M-1 Light Manufacturing

(A) Area. Every lot upon which a structure is hereafter erected shall front onto a dedicated street or public right-of-way, and shall conform to the following:

(1) There is no minimum lot area or tract area (where sanitary sewers are available), but the minimum lot area or tract width in one hundred-fifty (150) feet.

(2) The minimum principal structure width is twenty (20) feet.

(3) Where no sanitary sewers are available and disposal is by soil absorption, the minimum lot area shall not be less than one (1) acre. The Posey County Health Department may require a larger lot.

(B) Yards.

(1) Front Yard and Street Side Yard:

(a) Every lot or tract shall have a front yard (or street side yard) not less than twenty-five (25) feet in depth. The front yard and street side yard requirement may be reduced to none if adjacent lots or the majority of the lots on a blockface have no front yard or street side yard.

(b) If the there is no dedicated roadway right-of-way, the front yard (or corner lot side yard) setback from the center of the roadway is twenty-five (25) feet plus one-half the right-of-way width of the applicable roadway functional class as if the roadway had been dedicated (adding 25 feet for a "local street," 40 feet for a "collector" or "secondary arterial," 60 feet for a "primary arterial," and 75 feet for a "divided primary arterial").

(2) Side Yard:

(a) Every lot shall have a side yard not less than ten (10) feet in depth.

(b) When an M District abuts an R or O District, the side yard and rear yard requirement is increased to 20 feet, is further increased an additional foot for each additional foot of building height exceeding 28 feet, and cannot be reduced by landscaping. A fence is required between industrial lots, and an opaque fence and evergreen screen is required in the side and rear yard adjacent to non-industrial zones. Further, when an M District abuts an R or O District, a combination of opaque fence, evergreen screen and earthen berm is required.

(3) Rear Yard:

(a) Every lot or tract shall have a rear yard of not less than twenty (20) feet in depth.

(b) When an M District abuts an R or O District, the side yard and rear yard requirement is increased to 20 feet, is further increased an additional foot for each additional foot of building height exceeding 28 feet, and cannot be reduced by landscaping. A fence is required between industrial lots, and an opaque fence and evergreen screen is required in the side and rear yard adjacent to non-industrial zones. Further, when an M District abuts an R or O District, a combination of opaque fence, evergreen screen and earthen berm is required.

(C) Height: There is no height limitation for the M-1 District.

(D) Lot Coverage: The combined area occupied by all principal and accessory buildings shall not exceed

sixty-five percent (65%) of the area of the lot.
(E) Minimum Floor Area: There is no minimum livable floor area.
(F) Floor Area Ratio: There is no maximum floor area ratio.

153.104 SITE DEVELOPMENT PLAN REVIEW

By reason of potential adverse effects on public services or to neighboring land uses, site plan review and approval is required for all manufacturing development for the purpose of assuring proper accessibility, circulation, functional relationships of uses and compatibility with adjoining and nearby development. No building permit shall be issued, nor use commenced within this development except in accordance with an approved site development plan. See Section 153.223 which also governs the manufacturing site development plan review process.

153.105 USE REGULATIONS – M-2 Medium Manufacturing District

(A) Use by Right. The principal uses permitted in the M-2 Medium Manufacturing District are designed by Use Units. The Use Units are groupings of individual uses and are fully described, including their respective off-street parking, loading, and screening requirements and other use conditions in Sections 153.141 to 153.173. The Use Units permitted in the M-2 Medium Manufacturing District are set forth below:

(1) Use Unit 1 – Areawide Uses by Right
(2) Use Unit 3 – Public Protection and Utility Facilities
(3) Use Unit 10 – Off-Street Parking Areas
(4) Use Unit 11 – Offices and Studios
(5) Use Unit 15 – Other Trades and Services (sexually oriented businesses only by Special Exception)
(6) Use Unit 16 -- Gasoline Service Stations
(7) Use Unit 17 – Automotive and Allied Activities
(8) Use Unit 21 – Business Signs and Outdoor Advertising
(9) Use Unit 22 – Research and Development
(10) Use Unit 23 – Warehousing and Wholesaling
(11) Use Unit 25 – Light Manufacturing
(12) Use Unit 26 – Medium Manufacturing and Industry
(13) Other Uses: Other uses or enterprises similar to the above, which in the judgment of the Area Plan Commission Board or Board of Zoning Appeals are similar to and not more objectionable to the general welfare, than the uses listed. Other uses so determined shall be regarded as listed uses. In no instance, however, shall the Area Plan Commission Board or Board of Zoning Appeals determine nor the regulations be so interpreted, that a use shall be permitted in this district where such use is specifically listed as a Use by Special Exception in this district.
(14) Use Unit 29-Mobile Office Trailer, so long as property does not abut a residential district. (as amended Mt.Vernon 5-16-13, Cynthiana 5-14-13, Poseyville 5-8-13, County 5-7-13)

(B) Use by Special Exception. Special Exception Uses may be permitted by the Board of Zoning Appeals following a public hearing, as indicated below, when such are deemed essential or desirable to the public convenience or welfare and are in harmony with the various elements or objectives of the Comprehensive Plan:

(1) Use Unit 2 – Areawide Special Exception Uses
(2) Use Unit 12 – Entertainment and Eating Establishments
(3) Use Unit 13 – Convenience Goods and Services
(4) Use Unit 14 – Shopping Goods and Services
(5) Use Unit 15 – Sexually Oriented Businesses
(6) Use Unit 18 – Drive-In Restaurants
(7) Use Unit 19 – Hotel, Motel and Recreation Facilities
(8) Use Unit 20 – Commercial Recreation: Intensive (as amended 10/16/02 Posey County, 11/01/12 Mt. Vernon, 11/13/12 Cynthiana, 11/14.2012 Poseyville)
(9) Use Unit 24 – Mining and Mineral Processing
(10) Use Unit 27 – Heavy Manufacturing and Industry
(11) Use Unit 29-Mobile Office Trailer when property abuts a residential district. (as amended Mt.Vernon 5-16-13, Cynthiana 5-14-13, Poseyville 5-8-13, County 5-7-13)

(C) Limitations on Uses by Right and Special Exception:

(1) All processes and activities are to be within an enclosed building; while outdoor storage is permitted, it must be completely screened from the public right-of-way and abutting properties:

(a) Unless permitted through a use requiring a Special Exception approved by the Board of Zoning Appeals.

(b) Except accessory parking lots and service stations.

(c) Except retail stores in Use Units 14 and 15 involving the sale or rental of building materials, lawn and garden equipment, lumber, shrubs, trees and flowers.

(d) Except uses in Use Unit 17 (automobile and allied products).

(2) All products shall be sold as retail on the premises.

(3) All on-site lighting shall be directed toward the structures on-site and away from any neighboring residential districts.

(4) Sexually Oriented Business

(a) No person shall cause or permit the establishment of any sexually oriented businesses as defined in 153.270 unless that business is specifically approved as a Special Exception by the board of Zoning Appeals. This business may be established only within those conditions set by the Board of Zoning Appeals. See Section 153.246(C)(4).

(b) The terminology "establishment of a sexually oriented business" shall be defined to include within its meaning the opening of such business as a new business, the relocation of such business, the enlargement of such business in either scope or area, and/or the conversion of an existing business location to any of the sexually oriented uses as defined in Section 153.270.

(5) All junkyards, salvage yards, storage yards, outside storage yards, commercial vehicle and equipment parking lots, scrap yards, scrap metal reduction operations, garbage reduction operations, or similar operations to any of the afore listed shall be completely enclosed with an opaque fence not less than eight (8) feet in height. This fencing requirement is mandatory for all storage areas for inoperable vehicles or inoperable equipment in conjunction with repair shops or similar operations when such storage areas abut the Residential or Office Districts or are visible from the public way.

(D) Accessory uses permitted. Those accessory uses which are customarily incidental to a permitted principal use are also permitted in the M-2 Districts.

(E) Accessory Use Conditions:

(1) Accessory buildings shall meet the minimum building setback lines of the applicable district.

(2) An accessory building which is erected as an integral part of the principal building shall be structurally a part thereof. The accessory building shall have a common wall therewith, and shall comply with the requirements applicable to the principal building.

(3) Accessory storage of materials, equipment, or products within two hundred (200) feet of an abutting R District shall be screened by the erection of a screening wall or fence along the lot line or lines in common with the abutting R District.

(4) Signs in the Manufacturing Districts, whether accessory or principal uses, are subject to the use conditions set forth in Use Unit 21.

153.106 BULK AND AREA REQUIREMENTS– M-2 Medium Manufacturing District

(A) Area: Every lot upon which a structure is hereafter erected shall front onto a dedicated street or public right-of-way, and shall conform to the following:

(1) There is no minimum lot area or tract area (where sanitary sewers are available), but the minimum lot area or tract width in two hundred (200) feet.

(2) The minimum principal structure width is twenty (20) feet.

(3) Where no sanitary sewers are available and disposal is by soil absorption, the minimum lot area shall not be less than one (1) acre. The Posey County Health Department may require a larger lot.

(B) Yards.

(1) Front Yard and Street Side Yard:

(a) Every lot or tract shall have a front yard (or street side yard) not less than twenty-five (25) feet in depth. The front yard and street side yard requirement may be reduced to none if adjacent lots or the majority of the lots on a blockface have no front yard or street side yard.

(b) If the there is no dedicated roadway right-of-way, the front yard (or corner lot side yard) setback from the center of the roadway is twenty-five (25) feet plus one-half the right-of-way width of the applicable roadway functional class as if the roadway had been dedicated (adding 25 feet for a "local street," 40 feet for a

"collector" or "secondary arterial," 60 feet for a "primary arterial," and 75 feet for a "divided primary arterial").

(2) Side yard:

(a) Every lot shall have a side yard not less than ten (10) feet in depth.

(b) When an M District abuts an R or O District, the side yard and rear yard requirement is increased to 20 feet, is further increased an additional foot for each additional foot of building height exceeding 28 feet, and cannot be reduced by landscaping. A fence is required between industrial lots, and an opaque fence and evergreen screen is required in the side and rear yard adjacent to non-industrial zones. Further, when an M District abuts an R or O District, a combination of opaque fence, evergreen screen and earthen berm is required.

(3) Rear Yard:

(a) Every lot or tract shall have a rear yard of not less than twenty (20) feet in depth.

(b) When an M District abuts an R or O District, the side yard and rear yard requirement is increased to 20 feet, is further increased an additional foot for each additional foot of building height exceeding 28 feet, and cannot be reduced by landscaping. A fence is required between industrial lots, and an opaque fence and evergreen screen is required in the side and rear yard adjacent to non-industrial zones. Further, when an M District abuts an R or O District, a combination of opaque fence, evergreen screen and earthen berm is required.

(C) Height: There is no height limitation for the M-2 District.

(D) Lot Coverage: The combined area occupied by all principal and accessory buildings shall not exceed sixty-five percent (65%) of the area of the lot.

(E) Minimum Floor Area: There is no minimum livable floor area.

(G) Floor Area Ratio: There is no maximum floor area ratio.

153.107 SITE DEVELOPMENT PLAN REVIEW

By reason of potential adverse effects on public services or to neighboring land uses, site plan review and approval is required for all manufacturing development for the purpose of assuring proper accessibility, circulation, functional relationships of uses and compatibility with adjoining and nearby development. No building permit shall be issued, nor use commenced within this development except in accordance with an approved site development plan. See Section 153.233 which also governs the manufacturing site development plan review process.

153.110 FLOOD HAZARD (FH) AREA OR FLOOD PRONE DISTRICT

153.111 STATUTORY AUTHORIZATION, FINDINGS OF FACT, PURPOSE, AND OBJECTIVES

(A) Statutory Authorization. The Indiana Legislature has in IC 36-7-4 granted the power to local government units to control land use within their jurisdictions. Therefore, the Posey County Commissioners of Posey County (Unincorporated Areas), the Mount Vernon City Council of the City of Mount Vernon, Posey County, the Poseyville Town Council of the Town of Poseyville, Posey County & the Cynthiana Town Council of the Town of Cynthiana, Posey County do hereby adopt the following floodplain management regulations.

(B) Findings of Fact.

(1) The flood hazard areas of the unincorporated areas of Posey County, the City of Mount Vernon, the Town of Cynthiana, and the Town of Poseyville are subject to periodic inundation which results in loss of life and property, health and safety hazards, disruption of commerce and governmental services, extraordinary public expenditures for flood protection and relief, and impairment of the tax base, all of which adversely affect the public health, safety, and general welfare.

(2) These flood losses are caused by the cumulative effect of obstructions in floodplains causing increases in flood heights and velocities, and by the occupancy in flood hazard areas by uses vulnerable to floods or hazardous to other lands which are inadequately elevated, inadequately flood-proofed, or otherwise unprotected from flood damages.

(C) Statement of Purpose. It is the purpose of this ordinance to promote the public health, safety, and general welfare and to minimize public and private losses due to flood conditions in specific areas by provisions designed to:

(1) Restrict or prohibit uses which are dangerous to health, safety, and property due to water or erosion hazards, which result in damaging increases in erosion or in flood heights or velocities.

(2) Require that uses vulnerable to floods, including facilities which serve such uses, be protected against flood damage at the time of initial construction.

(3) Control the alteration of natural floodplains, stream channels, and natural protective barriers which are involved in the accommodation of flood waters.

(4) Control filling, grading, dredging, and other development which may increase erosion or flood damage.

(5) Prevent or regulate the construction of flood barriers which will unnaturally divert floodwaters or which may increase flood hazards to other lands.

(6) Make federal flood insurance available for structures and their contents in the unincorporated areas of Posey County, the City of Mount Vernon, the Town of Cynthiana, and the Town of Poseyville by fulfilling the requirements of the National Flood Insurance Program.

(D) Objectives. The objectives of this ordinance are:

(1) To protect human life and health.

(2) To minimize expenditure of public money for costly flood control projects.

(3) To minimize the need for rescue and relief efforts associated with flooding and generally undertaken at the expense of the general public.

(4) To minimize prolonged business interruptions.

(5) To minimize damage to public facilities and utilities such as water and gas mains, electric, telephone, and sewer lines, streets, and bridges located in floodplains.

(6) To help maintain a stable tax base by providing for the sound use and development of flood prone areas in such a manner as to minimize flood blight areas.

153.112 DEFINITIONS. Unless specifically defined below, words or phrases used in this ordinance shall be interpreted so as to give them the meaning they have in common usage and to give this ordinance its most reasonable application.

A zone means portions of the SFHA in which the principal source of flooding is runoff from rainfall, snowmelt, or a combination of both. In A zones, floodwaters may move slowly or rapidly, but waves are usually not a significant threat to buildings. These areas are labeled as Zone A, Zone AE, Zones A1-A30, Zone AO, Zone AH, Zone AR and Zone A99 on a FIRM. The definitions are presented below:

> Zone A: Areas subject to inundation by the one-percent annual chance flood event. Because detailed hydraulic analyses have not been performed, no base flood elevation or depths are shown.
>
> Zone AE and A1-A30: Areas subject to inundation by the one-percent annual chance flood event determined by detailed methods. Base flood elevations are shown within these zones. (Zone AE is on new and revised maps in place of Zones A1-A30.)
>
> Zone AO: Areas subject to inundation by one-percent annual chance shallow flooding (usually sheet flow on sloping terrain) where average depths are between one and three feet. Average flood depths derived from detailed hydraulic analyses are shown within this zone.
>
> Zone AH: Areas subject to inundation by one-percent annual chance shallow flooding (usually areas of ponding) where average depths are between one and three feet. Average flood depths derived from detailed hydraulic analyses are shown within this zone.
>
> Zone AR: Areas that result from the decertification of a previously accredited flood protection system that is determined to be in the process of being restored to provide base flood protection.
>
> Zone A99: Areas subject to inundation by the one-percent annual chance flood event, but which will ultimately be protected upon completion of an under-construction Federal flood protection system. These are areas of special flood hazard where enough progress has been made on the construction of a protection system, such as dikes, dams, and levees, to consider it complete for insurance rating purposes. Zone A99 may only be used when the flood protection system has reached specified statutory progress toward completion. No base flood elevations or depths are shown.

Accessory structure (appurtenant structure) means a structure with a floor area 400 square feet or less that is located on the same parcel of property as the principal structure and the use of which is incidental to the use of the principal structure. Accessory structures should constitute a minimal initial investment, may not be used for human habitation, and be designed to have minimal flood damage potential. Examples of accessory structures are detached garages, carports, storage sheds, pole barns, and hay sheds

Addition (to an existing structure) means any walled and roofed expansion to the perimeter of a structure in which the addition is connected by a common load-bearing wall other than a firewall. Any walled and roofed addition, which is connected by a firewall or is separated by independent perimeter load-bearing walls, is new construction.

Appeal means a request for a review of the floodplain administrator's interpretation of any provision of this ordinance.

Area of shallow flooding means a designated AO or AH Zone on the community's Flood Insurance Rate Map (FIRM) with base flood depths from one to three feet where a clearly defined channel does not exist, where the path of flooding is unpredictable and indeterminate, and where velocity flow may be evident. Such flooding is characterized by ponding or sheet flow.

Base Flood means the flood having a one percent chance of being equaled or exceeded in any given year.

Base Flood Elevation (BFE) means the elevation of the one-percent annual chance flood.

Basement means that portion of a structure having its floor sub-grade (below ground level) on all sides.

Boundary River means the part of the Ohio River that forms the boundary between Kentucky and Indiana.

Boundary River Floodway means the floodway of a boundary river.

Building - see "Structure."

Community means a political entity that has the authority to adopt and enforce floodplain ordinances for the area under its jurisdiction.

Community Rating System (CRS) means a program developed by the Federal Insurance Administration to provide incentives for those communities in the Regular Program that have gone beyond the minimum floodplain management requirements to develop extra measures to provide protection from flooding.

Critical facility means a facility for which even a slight chance of flooding might be too great. Critical facilities include, but are not limited to, schools, nursing homes, hospitals, police, fire, and emergency response installations, installations which produce, use or store hazardous materials or hazardous waste.

Development means any man-made change to improved or unimproved real estate including but not limited to:

(1) construction, reconstruction, or placement of a structure or any addition to a structure;

(2) installing a manufactured home on a site, preparing a site for a manufactured home or installing a recreational vehicle on a site for more than 180 days;

(3) installing utilities, erection of walls and fences, construction of roads, or similar projects;

(4) construction of flood control structures such as levees, dikes, dams, channel improvements, etc.;

(5) mining, dredging, filling, grading, excavation, or drilling operations;

(6) construction and/or reconstruction of bridges or culverts;

(7) storage of materials; or

(8) any other activity that might change the direction, height, or velocity of flood or surface waters.

"Development" does not include activities such as the maintenance of existing structures and facilities such as painting, re-roofing; resurfacing roads; or gardening, plowing, and similar agricultural practices that do not involve filling, grading, excavation, or the construction of permanent structures.

Elevated structure means a non-basement structure built to have the lowest floor elevated above the ground level by means of fill, solid foundation perimeter walls, filled stem wall foundations (also called chain walls), pilings, or columns (posts and piers).

Elevation Certificate is a certified statement that verifies a structure's elevation information.

Emergency Program means the first phase under which a community participates in the NFIP. It is intended to provide a first layer amount of insurance at subsidized rates on all insurable structures in that community before the effective date of the initial FIRM.

Existing manufactured home park or subdivision means a manufactured home park or subdivision for which the construction of facilities for servicing the lots on which the manufactured homes are to be affixed (including, at a minimum, the installation of utilities, the construction of streets, and either final site grading or the pouring of concrete pads) is completed before the effective date of the community's first floodplain ordinance.

Expansion to an existing manufactured home park or subdivision means the preparation of additional sites by the construction of facilities for servicing the lots on which the manufactured homes are to be affixed (including the installation of utilities, the construction of streets, and either final site grading or the pouring of concrete pads).

FEMA means the Federal Emergency Management Agency.

Flood means a general and temporary condition of partial or complete inundation of normally dry land areas from the overflow, the unusual and rapid accumulation, or the runoff of surface waters from any source.

Flood Boundary and Floodway Map (FBFM) means an official map on which the Federal Emergency Management Agency (FEMA) or Federal Insurance Administration (FIA) has delineated the areas of flood hazards and regulatory floodway.

Flood Insurance Rate Map (FIRM) means an official map of a community, on which FEMA has delineated both the areas of special flood hazard and the risk premium zones applicable to the community.

Flood Insurance Study (FIS) is the official hydraulic and hydrologic report provided by FEMA. The report contains flood profiles, as well as the FIRM, FBFM (where applicable), and the water surface elevation of the base flood.

Flood Prone Area means any land area acknowledged by a community as being susceptible to inundation by water from any source. (See "Flood")

Flood Protection Grade (FPG) is the elevation of the regulatory flood plus two feet at any given location in the SFHA. (see "Freeboard")

Floodplain means the channel proper and the areas adjoining any wetland, lake, or watercourse which have been or hereafter may be covered by the regulatory flood. The floodplain includes both the floodway and the fringe districts.

Floodplain management means the operation of an overall program of corrective and preventive measures for reducing flood damage and preserving and enhancing, where possible, natural resources in the floodplain, including but not limited to emergency preparedness plans, flood control works, floodplain management regulations, and open space plans.

Floodplain management regulations means this ordinance and other zoning ordinances, subdivision regulations, building codes, health regulations, special purpose ordinances, and other applications of police power which control development in flood-prone areas. This term describes federal, state, or local regulations in any combination thereof, which provide standards for preventing and reducing flood loss and damage. Floodplain management regulations are also referred to as floodplain regulations, floodplain ordinance, flood damage prevention ordinance, and floodplain management requirements.

Floodproofing (dry floodproofing) is a method of protecting a structure that ensures that the structure, together with attendant utilities and sanitary facilities, is watertight to the floodproofed design elevation with walls that are substantially impermeable to the passage of water. All structural components of these walls are capable of resisting hydrostatic and hydrodynamic flood forces, including the effects of buoyancy, and anticipated debris impact forces.

Floodproofing certificate is a form used to certify compliance for non-residential structures as an alternative to elevating structures to or above the FPG. This certification must be by a Registered Professional Engineer or Architect.

Floodway is the channel of a river or stream and those portions of the floodplains adjoining the channel which are reasonably required to efficiently carry and discharge the peak flood flow of the regulatory flood of any river or stream.

Freeboard means a factor of safety, usually expressed in feet above the BFE, which is applied for the purposes of floodplain management. It is used to compensate for the many unknown factors that could contribute to flood heights greater than those calculated for the base flood.

Fringe is those portions of the floodplain lying outside the floodway.

Hardship (as related to variances of this ordinance) means the exceptional hardship that would result from a failure to grant the requested variance. The Board of Zoning Appeals requires that the variance is exceptional, unusual, and peculiar to the property involved. Mere economic or financial hardship alone is NOT exceptional. Inconvenience, aesthetic considerations, physical handicaps, personal preferences, or the disapproval of one's neighbors likewise cannot, as a rule, qualify as an exceptional hardship. All of these problems can be resolved through other means without granting a variance, even if the alternative is more expensive, or requires the property owner to build elsewhere or put the parcel to a different use than originally intended.

Highest adjacent grade means the highest natural elevation of the ground surface, prior to the start of construction, next to the proposed walls of a structure.

Historic structures means any structures individually listed on the National Register of Historic Places or the Indiana State Register of Historic Sites and Structures.

Increased Cost of Compliance (ICC) means the cost to repair a substantially damaged structure that exceeds the minimal repair cost and that is required to bring a substantially damaged structure into compliance with the local flood damage prevention ordinance. Acceptable mitigation measures are elevation, relocation, demolition, or any combination thereof. All renewal and new business flood insurance policies with effective dates on or after June 1, 1997, will include ICC coverage.

Letter of Final Determination (LFD) means a letter issued by FEMA during the mapping update process which establishes final elevations and provides the new flood map and flood study to the community. The LFD initiates the six-month adoption period. The community must adopt or amend its floodplain management regulations during this six-month period unless the community has previously incorporated an automatic adoption clause.

Letter of Map Change (LOMC) is a general term used to refer to the several types of revisions and amendments to FEMA maps that can be accomplished by letter. They include Letter of Map Amendment (LOMA), Letter of Map Revision (LOMR), and Letter of Map Revision based on Fill (LOMR-F). The definitions are presented below:

> **Letter of Map Amendment (LOMA)** means an amendment by letter to the currently effective FEMA map that establishes that a property is not located in a SFHA through the submittal of property specific elevation data. A LOMA is only issued by FEMA.
>
> **Letter of Map Revision (LOMR)** means an official revision to the currently effective FEMA map. It is issued by FEMA and changes flood zones, delineations, and elevations.
>
> **Letter of Map Revision Based on Fill (LOMR-F)** means an official revision by letter to an effective NFIP map. A LOMR-F provides FEMA's determination concerning whether a structure or parcel has been elevated on fill above the BFE and excluded from the SFHA.

Lowest adjacent grade means the lowest elevation, after completion of construction, of the ground, sidewalk, patio, deck support, or basement entryway immediately next to the structure.

Lowest floor means the lowest elevation described among the following:

(1) The top of the lowest level of the structure.

(2) The top of the basement floor.

(3) The top of the garage floor, if the garage is the lowest level of the structure.

(4) The top of the first floor of a structure elevated on pilings or pillars.

(5) The top of the floor level of any enclosure, other than a basement, below an elevated structure where the walls of the enclosure provide any resistance to the flow of flood waters unless:

a) the walls are designed to automatically equalize the hydrostatic flood forces on the walls by allowing for the entry and exit of flood waters by providing a minimum of two openings (in addition to doorways and windows) in a minimum of two exterior walls; if a structure has more than one enclosed area, each shall have openings on exterior walls;

b) the total net area of all openings shall be at least one (1) square inch for every one square foot of enclosed area; the bottom of all such openings shall be no higher than one (1) foot above the exterior grade or the interior grade immediately beneath each opening, whichever is higher; and,

c) such enclosed space shall be usable solely for the parking of vehicles and building access.

Manufactured home means a structure, transportable in one or more sections, which is built on a permanent chassis and is designed for use with or without a permanent foundation when attached to the required utilities. The term "manufactured home" does not include a "recreational vehicle."

Manufactured home park or subdivision means a parcel (or contiguous parcels) of land divided into two or more manufactured home lots for rent or sale.

Market value means the building value, excluding the land (as agreed to between a willing buyer and seller), as established by what the local real estate market will bear. Market value can be established by independent certified appraisal, replacement cost depreciated by age of building (actual cash value), or adjusted assessed values.

Mitigation means sustained actions taken to reduce or eliminate long-term risk to people and property from hazards and their effects. The purpose of mitigation is twofold: to protect people and structures, and to minimize the cost of disaster response and recovery.

National Flood Insurance Program (NFIP) is the federal program that makes flood insurance available to owners of property in participating communities nationwide through the cooperative efforts of the Federal Government and the private insurance industry.

National Geodetic Vertical Datum (NGVD) of 1929 as corrected in 1929 is a vertical control used as a reference for establishing varying elevations within the floodplain.

New construction means any structure for which the “start of construction” commenced after the effective date of the community’s first floodplain ordinance.

New manufactured home park or subdivision means a manufactured home park or subdivision for which the construction of facilities for servicing the lots on which the manufactured homes are to be affixed (including at a minimum, the installation of utilities, the construction of streets, and either final site grading or the pouring of concrete pads) is completed on or after the effective date of the community’s first floodplain ordinance.

Non-boundary river floodway means the floodway of any river or stream other than a boundary river.

North American Vertical Datum of 1988 (NAVD 88) as adopted in 1993 is a vertical control datum used as a reference for establishing varying elevations within the floodplain.

Obstruction includes, but is not limited to, any dam, wall, wharf, embankment, levee, dike, pile, abutment, protection, excavation, canalization, bridge, conduit, culvert, building, wire, fence, rock, gravel, refuse, fill, structure, vegetation, or other material in, along, across or projecting into any watercourse which may alter, impede, retard or change the direction and/or velocity of the flow of water; or due to its location, its propensity to snare or collect debris carried by the flow of water, or its likelihood of being carried downstream.

One-percent annual chance flood is the flood that has a one percent (1%) chance of being equaled or exceeded in any given year. Any flood zone that begins with the letter A is subject to the one-percent annual chance flood. See “Regulatory Flood”.

Physical Map Revision (PMR) is an official republication of a community’s FEMA map to effect changes to base (1-percent annual chance) flood elevations, floodplain boundary delineations, regulatory floodways, and

planimetric features. These changes typically occur as a result of structural works or improvements, annexations resulting in additional flood hazard areas, or correction to base flood elevations or SFHAs.

Public safety and nuisance means anything which is injurious to the safety or health of an entire community, neighborhood or any considerable number of persons, or unlawfully obstructs the free passage or use, in the customary manner, of any navigable lake, or river, bay, stream, canal, or basin.

Recreational vehicle means a vehicle which is (1) built on a single chassis; (2) 400 square feet or less when measured at the largest horizontal projections; (3) designed to be self-propelled or permanently towable by a light duty truck; and (4) designed primarily not for use as a permanent dwelling, but as quarters for recreational camping, travel, or seasonal use.

Regular program means the phase of the community's participation in the NFIP where more comprehensive floodplain management requirements are imposed and higher amounts of insurance are available based upon risk zones and elevations determined in a FIS.

Regulatory flood means the flood having a one percent (1%) chance of being equaled or exceeded in any given year, as calculated by a method and procedure that is acceptable to and approved by the Indiana Department of Natural Resources and the Federal Emergency Management Agency. The regulatory flood elevation at any location is as defined in Section 153.113(B) of this ordinance. The "Regulatory Flood" is also known by the term "Base Flood", "One-Percent Annual Chance Flood", and "100-Year Flood".

Repetitive loss means flood-related damages sustained by a structure on two separate occasions during a 10-year period for which the cost of repairs at the time of each such flood event, on the average, equaled or exceeded 25% of the market value of the structure before the damage occurred.

Section 1316 is that section of the National Flood Insurance Act of 1968, as amended, which states that no new flood insurance coverage shall be provided for any property that the Administrator finds has been declared by a duly constituted state or local zoning authority or other authorized public body to be in violation of state or local laws, regulations, or ordinances that intended to discourage or otherwise restrict land development or occupancy in flood-prone areas.

Special Flood Hazard Area (SFHA) means those lands within the jurisdiction of Posey County, the City of Mount Vernon, the Town of Cynthiana, and the Town of Poseyville subject to inundation by the regulatory flood. The SFHAs of Posey County, the City of Mount Vernon, the Town of Cynthiana, and the Town of Poseyville are generally identified as such on the Posey County, Indiana and Incorporated Areas Flood Insurance Rate Map dated November 5, 2014 as well as any future updates, amendments, or revisions, prepared by the Federal Emergency Management Agency with the most recent date. (These areas are shown on a FIRM as Zone A, AE, A1- A30, AH, AR, A99, or AO).

Start of construction includes substantial improvement, and means the date the building permit was issued, provided the actual start of construction, repair, reconstruction, or improvement was within 180 days of the permit date. The actual start means either the first placement of permanent construction of a structure on a site, such as the pouring of a slab or footings, the installation of piles, the construction of columns, or any work beyond the stage of excavation; or the placement of a manufactured home on a foundation. Permanent construction does not include land preparation, such as clearing, grading and filling; nor does it include the installation of streets and/or walkways; nor does it include excavation for a basement, footings, piers, foundations, or the erection of temporary forms; nor does it include the installation on the property of accessory buildings, such as garages or sheds not occupied as dwelling units or not part of the main structure.

For a substantial improvement, the actual start of construction means the first alteration of any wall, ceiling, floor, or other structural part of a building, whether or not that alteration affects the external dimensions of the building.

Structure means a structure that is principally above ground and is enclosed by walls and a roof. The term includes a gas or liquid storage tank, a manufactured home, or a prefabricated building. The term also includes recreational vehicles to be installed on a site for more than 180 days.

Substantial damage means damage of any origin sustained by a structure whereby the cost of restoring the structure to it's before damaged condition would equal or exceed 50 percent of the market value of the structure before the damage occurred.

Substantial improvement means any reconstruction, rehabilitation, addition, or other improvement of a structure, the cost of which equals or exceeds 50 percent of the market value of the structure before the "start of construction" of the improvement. This term includes structures that have incurred "repetitive loss" or "substantial damage" regardless of the actual repair work performed. The term does not include improvements of structures to correct existing violations of state or local health, sanitary, or safety code requirements or any alteration of a "historic structure", provided that the alteration will not preclude the structures continued designation as a "historic structure".

Suspension means the removal of a participating community from the NFIP because the community has not enacted and/or enforced the proper floodplain management regulations required for participation in the NFIP.

Variance is a grant of relief from the requirements of this ordinance, which permits construction in a manner otherwise prohibited by this ordinance where specific enforcement would result in unnecessary hardship.

Violation means the failure of a structure or other development to be fully compliant with this ordinance. A structure or other development without the elevation, other certification, or other evidence of compliance required in this ordinance is presumed to be in violation until such time as that documentation is provided.

Watercourse means a lake, river, creek, stream, wash, channel or other topographic feature on or over which waters flow at least periodically. Watercourse includes specifically designated areas in which substantial flood damage may occur.

X zone means the area where the flood hazard is less than that in the SFHA. Shaded X zones shown on recent FIRMs (B zones on older FIRMs) designate areas subject to inundation by the flood with a 0.2 percent chance of being equaled or exceeded (the 500-year flood). Unshaded X zones (C zones on older FIRMs) designate areas where the annual exceedance probability of flooding is less than 0.2 percent.

Zone means a geographical area shown on a FIRM that reflects the severity or type of flooding in the area.

Zone A (see definition for A zone)

Zone B, C, and X means areas identified in the community as areas of moderate or minimal hazard from the principal source of flood in the area. However, buildings in these zones could be flooded by severe, concentrated rainfall coupled with inadequate local drainage systems. Flood insurance is available in participating communities but is not required by regulation in these zones. (Zone X is used on new and revised maps in place of Zones B and C.)

153.113 GENERAL PROVISIONS

(A) Lands to Which This Ordinance Applies. This ordinance shall apply to all SFHAs and known flood prone areas within the jurisdiction of Posey County, the City of Mount Vernon, the Town of Cynthiana, and the Town of Poseyville.

(B) Basis for Establishing Regulatory Flood Data. This ordinance's protection standard is the regulatory flood. The best available regulatory flood data is listed below.

(1) The regulatory flood elevation, floodway, and fringe limits for the studied SFHAs within the jurisdiction of Posey County, the City of Mount Vernon, the Town of Cynthiana, and the Town of Poseyville shall be as delineated on the one-percent annual chance flood profiles in the Flood Insurance Study of Posey County, Indiana and Incorporated Areas and the corresponding Flood Insurance Rate Map dated November 5, 2014 as well as any future updates, amendments, or revisions, prepared by the Federal Emergency Management Agency with the most recent date.

(2) The regulatory flood elevation, floodway, and fringe limits for each of the SFHAs within the jurisdiction of Posey County, the City of Mount Vernon, the Town of Cynthiana, and the Town of Poseyville, delineated as an "A Zone" on the Posey County, Indiana and Incorporated Areas Flood Insurance Rate Map dated November 5, 2014 as well as any future updates, amendments, or revisions, prepared by the Federal Emergency Management Agency with the most recent date, shall be according to the best data available as provided by the Indiana Department of Natural Resources; provided the upstream drainage area from the subject site is greater than one square mile. Whenever a party disagrees with the best available data, the party needs to replace existing data with better data that meets current engineering standards. To be considered, this data must be submitted to the Indiana Department of Natural Resources for review and subsequently approved.

(3) In the absence of a published FEMA map, or absence of identification on a FEMA map, the regulatory flood elevation, floodway, and fringe limits of any watercourse in the communities' known flood prone areas shall be according to the best data available as provided by the Indiana Department of Natural Resources; provided the upstream drainage area from the subject site is greater than one square mile.

(4) Upon issuance of a Letter of Final Determination (LFD), any more restrictive data in the new (not yet effective) mapping/study shall be utilized for permitting and construction (development) purposes, replacing all previously effective less restrictive flood hazard data provided by FEMA.

(C) Establishment of Floodplain Development Permit. A Floodplain Development Permit shall be required in conformance with the provisions of this ordinance prior to the commencement of any development activities in areas of special flood hazard.

(D) Compliance. No structure shall hereafter be located, extended, converted or structurally altered within the SFHA without full compliance with the terms of this ordinance and other applicable regulations. No land or stream within the SFHA shall hereafter be altered without full compliance with the terms of this ordinance and other applicable regulations.

(E) Abrogation and Greater Restrictions. This ordinance is not intended to repeal, abrogate, or impair any existing easements, covenants, or deed restrictions. However, where this ordinance and another conflict or overlap, whichever imposes the more stringent restrictions shall prevail.

(F) Discrepancy between Mapped Floodplain and Actual Ground Elevations.

(1) In cases where there is a discrepancy between the mapped floodplain (SFHA) on the FIRM and the actual ground elevations, the elevation provided on the profiles shall govern.

(2) If the elevation of the site in question is below the base flood elevation, that site shall be included in the SFHA and regulated accordingly.

(3) If the elevation (natural grade) of the site in question is above the base flood elevation and not located within the floodway, that site shall be considered outside the SFHA and the floodplain regulations will not be applied. The property owner shall be advised to apply for a LOMA.

G) Interpretation. In the interpretation and application of this ordinance all provisions shall be:

(1) Considered as minimum requirements.

(2) Liberally construed in favor of the governing body.
(3) Deemed neither to limit nor repeal any other powers granted under state statutes.

(H) Warning and Disclaimer of Liability. The degree of flood protection required by this ordinance is considered reasonable for regulatory purposes and is based on available information derived from engineering and scientific methods of study. Larger floods can and will occur on rare occasions. Therefore, this ordinance does not create any liability on the part of Posey County, the City of Mount Vernon, the Town of Cynthiana, the Town of Poseyville, the Indiana Department of Natural Resources, or the State of Indiana, for any flood damage that results from reliance on this ordinance or any administrative decision made lawfully thereunder.

(I) Penalties for Violation. Failure to obtain a Floodplain Development Permit in the SFHA or failure to comply with the requirements of a Floodplain Development Permit or conditions of a variance shall be deemed to be a violation of this ordinance. All violations shall be considered a common nuisance and shall be punishable by a fine not less than twenty-five dollars ($25.00) and not more than five hundred dollars ($500.00).

(1) A separate offense shall be deemed to occur for each day the violation continues to exist.
(2) The Floodplain Administrator shall inform the owner that any such violation is considered a willful act to increase flood damages and therefore may cause coverage by a Standard Flood Insurance Policy to be suspended.
(3) Nothing herein shall prevent Posey County, the City of Mount Vernon, the Town of Cynthiana, and the Town of Poseyville from taking such other lawful action to prevent or remedy any violations. All costs connected therewith shall accrue to the person or persons responsible.

153.114 ADMINISTRATION

(A) Designation of Administrator. The Executive Director of the Posey County Area Plan Commission shall administer and implement the provisions of this ordinance and is herein referred to as the Floodplain Administrator.

(B) Permit Procedures. Application for a Floodplain Development Permit shall be made to the Floodplain Administrator on forms furnished by him or her prior to any development activities, and may include, but not be limited to, the following: plans in duplicate drawn to scale showing the nature, location, dimensions, and elevations of the area in question; existing or proposed structures, earthen fill, storage of materials or equipment, drainage facilities, and the location of the foregoing. Specifically the following information is required:

(1) Application Stage.
   a) A description of the proposed development.
   b) Location of the proposed development sufficient to accurately locate property and structure(s) in relation to existing roads and streams.
   c) A legal description of the property site.
   d) A site development plan showing existing and proposed development locations and existing and proposed land grades.
   e) Elevation of the top of the planned lowest floor (including basement) of all proposed buildings. Elevation should be in NAVD 88 or NGVD.
   f) Elevation (in NAVD 88 or NGVD) to which any non-residential structure will be floodproofed.
   g) Description of the extent to which any watercourse will be altered or relocated as a result of proposed development. A hydrologic and hydraulic engineering study is required and any watercourse changes submitted to DNR for approval and then to FEMA as a Letter of Map Revision. (See Section 153.114(C)(6)for additional information.)
(2) Construction Stage.
   Upon establishment of the lowest floor of an elevated structure or structure constructed on fill, it shall be the duty of the applicant to submit to the Floodplain Administrator a certification of the NAVD 88 or NGVD elevation of the lowest floor, as built. Said certification shall be prepared by or under the direct supervision of a registered land surveyor or professional engineer and certified by the same. The Floodplain Administrator shall review the lowest floor elevation survey data submitted. The applicant

shall correct deficiencies detected by such review before any further work is allowed to proceed. Failure to submit the survey or failure to make said corrections required hereby shall be cause to issue a stop-work order for the project. Any work undertaken prior to submission of the elevation certification shall be at the applicant's risk.

Upon establishment of the floodproofed elevation of a floodproofed structure, it shall be the duty of the applicant to submit to the Floodplain Administrator a floodproofing certificate. Certification shall be prepared by or under the direct supervision of a registered professional engineer and certified by same. (The Floodplain Administrator shall review the floodproofing certification submitted.) The applicant shall correct any deficiencies detected by such review before any further work is allowed to proceed. Failure to submit the floodproofing certification or failure to make correction required shall be cause to issue a stop-work order for the project.

(3) Finished Construction.

Upon completion of construction, an elevation certification which depicts the "as-built" lowest floor elevation is required to be submitted to the Floodplain Administrator. If the project includes a floodproofing measure, floodproofing certification is required to be submitted by the applicant to the Floodplain Administrator.

(C) Duties and Responsibilities of the Floodplain Administrator. The Floodplain Administrator and/or designated staff is hereby authorized and directed to enforce the provisions of this ordinance. The administrator is further authorized to render interpretations of this ordinance, which are consistent with its spirit and purpose.

Duties and Responsibilities of the Floodplain Administrator shall include, but are not limited to:

(1) Review all floodplain development permits to assure that the permit requirements of this ordinance have been satisfied.

(2) Inspect and inventory damaged structures in the SFHA and complete substantial damage determinations.

(3) Ensure that construction authorization has been granted by the Indiana Department of Natural Resources for all development projects subject to Section 153.115(E) & (G)(1) of this ordinance, and maintain a record of such authorization (either copy of actual permit/authorization or floodplain analysis/regulatory assessment).

(4) Ensure that all necessary federal or state permits have been received prior to issuance of the local floodplain development permit. Copies of such permits/authorizations are to be maintained on file with the floodplain development permit.

(5) Maintain and track permit records involving additions and improvements to residences located in the floodway.

(6) Notify adjacent communities and the State Floodplain Coordinator prior to any alteration or relocation of a watercourse, and submit copies of such notifications to FEMA.

(7) Maintain for public inspection and furnish upon request local permit documents, damaged structure inventories, substantial damage determinations, regulatory flood data, SFHA maps, Letters of Map Change (LOMC), copies of DNR permits, letters of authorization, and floodplain analysis and regulatory assessments (letters of recommendation), federal permit documents, and "as-built" elevation and floodproofing data for all buildings constructed subject to this ordinance.

(8) Utilize and enforce all Letters of Map Change (LOMC) or Physical Map Revisions (PMR) issued by FEMA for the currently effective SFHA maps of the community.

(9) Assure that maintenance is provided within the altered or relocated portion of said watercourse so that the flood-carrying capacity is not diminished.

(10) Review certified plans and specifications for compliance.

(11) Verify and record the actual elevation of the lowest floor (including basement) of all new or substantially improved structures, in accordance with Section 153.114(B).
(12) Verify and record the actual elevation to which any new or substantially improved structures have been floodproofed in accordance with Section 153.114(B).
(13) Inspect sites for compliance. For all new and/or substantially improved buildings constructed in the SFHA, inspect before, during and after construction. Authorized County, City, and Town officials shall have the right to enter and inspect properties located in the SFHA.
(14) Stop Work Orders
a) Upon notice from the floodplain administrator, work on any building, structure or premises that is being done contrary to the provisions of this ordinance shall immediately cease.
b) Such notice shall be in writing and shall be given to the owner of the property, or to his agent, or to the person doing the work, and shall state the conditions under which work may be resumed.
(15) Revocation of Permits
a) The floodplain administrator may revoke a permit or approval, issued under the provisions of the ordinance, in cases where there has been any false statement or misrepresentation as to the material fact in the application or plans on which the permit or approval was based.
b) The floodplain administrator may revoke a permit upon determination by the floodplain administrator that the construction, erection, alteration, repair, moving, demolition, installation, or replacement of the structure for which the permit was issued is in violation of, or not in conformity with, the provisions of this ordinance.

153.115 PROVISIONS FOR FLOOD HAZARD REDUCTION

(A) General Standards. In all SFHAs and known flood prone areas the following provisions are required:

(1) New construction and substantial improvements shall be anchored to prevent flotation, collapse or lateral movement of the structure.
(2) Manufactured homes shall be anchored to prevent flotation, collapse, or lateral movement. Methods of anchoring may include, but are not limited to, use of over-the-top or frame ties to ground anchors. This standard shall be in addition to and consistent with applicable state requirements for resisting wind forces.
(3) New construction and substantial improvements shall be constructed with materials and utility equipment resistant to flood damage below the FPG.
(4) New construction and substantial improvements shall be constructed by methods and practices that minimize flood damage.
(5) Electrical, heating, ventilation, plumbing, air conditioning equipment, utility meters, and other service facilities shall be located at/above the FPG or designed so as to prevent water from entering or accumulating within the components below the FPG. Water and sewer pipes, electrical and telephone lines, submersible pumps, and other waterproofed service facilities may be located below the FPG.
(6) New and replacement water supply systems shall be designed to minimize or eliminate infiltration of flood waters into the system.
(7) New and replacement sanitary sewage systems shall be designed to minimize or eliminate infiltration of flood waters into the system.
(8) On-site waste disposal systems shall be located and constructed to avoid impairment to them or contamination from them during flooding.
(9) Any alteration, repair, reconstruction or improvements to a structure that is in compliance with the provisions of this ordinance shall meet the requirements of "new construction" as contained in this ordinance.

(B) Specific Standards. In all SFHAs, the following provisions are required:

(1) In addition to the requirements of Section 153.115(A), all structures to be located in the SFHA shall be protected from flood damage below the FPG. This building protection requirement applies to the

following situations:

a) Construction or placement of any structure having a floor area greater than 400 square feet.
b) Addition or improvement made to any existing structure where the cost of the addition or improvement equals or exceeds 50% of the value of the existing structure (excluding the value of the land).
c) Reconstruction or repairs made to a damaged structure where the costs of restoring the structure to it's before damaged condition equals or exceeds 50% of the market value of the structure (excluding the value of the land) before damage occurred.
d) Installing a travel trailer or recreational vehicle on a site for more than 180 days.
e) Installing a manufactured home on a new site or a new manufactured home on an existing site. This ordinance does not apply to returning the existing manufactured home to the same site it lawfully occupied before it was removed to avoid flood damage.
f) Reconstruction or repairs made to a repetitive loss structure.
g) Addition or improvement made to any existing structure with a previous addition or improvement constructed since the community's first floodplain ordinance.

(2) **Residential Structures.** New construction or substantial improvement of any residential structure (or manufactured home) shall have the lowest floor; including basement, at or above the FPG (two feet above the base flood elevation). Should solid foundation perimeter walls be used to elevate a structure, openings sufficient to facilitate the unimpeded movements of floodwaters shall be provided in accordance with the standards of Section 153.115(B)(4).

(3) **Non-Residential Structures.** New construction or substantial improvement of any commercial, industrial, or non-residential structure (or manufactured home) shall either have the lowest floor, including basement, elevated to or above the FPG (two feet above the base flood elevation) or be floodproofed to or above the FPG. Should solid foundation perimeter walls be used to elevate a structure, openings sufficient to facilitate the unimpeded movements of floodwaters shall be provided in accordance with the standards of Section 153.115(B)(4). Structures located in all "A Zones" may be floodproofed in lieu of being elevated if done in accordance with the following:

a) A Registered Professional Engineer or Architect shall certify that the structure has been designed so that below the FPG, the structure and attendant utility facilities are watertight and capable of resisting the effects of the regulatory flood. The structure design shall take into account flood velocities, duration, rate of rise, hydrostatic pressures, and impacts from debris or ice. Such certification shall be provided to the official as set forth in Section 153.114(C)(12).
b) Floodproofing measures shall be operable without human intervention and without an outside source of electricity.

(4) **Elevated Structures.** New construction or substantial improvements of elevated structures shall have the lowest floor at or above the FPG.

Elevated structures with fully enclosed areas formed by foundation and other exterior walls below the flood protection grade shall be designed to preclude finished living space and designed to allow for the entry and exit of floodwaters to automatically equalize hydrostatic flood forces on exterior walls. Designs must meet the following minimum criteria:

a) Provide a minimum of two openings located in a minimum of two exterior walls (having a total net area of not less than one square inch for every one square foot of enclosed area).
b) The bottom of all openings shall be no more than one foot above the exterior grade or the interior grade immediately beneath each opening, whichever is higher.
c) Openings may be equipped with screens, louvers, valves or other coverings or devices provided they permit the automatic flow of floodwaters in both directions.
d) Access to the enclosed area shall be the minimum necessary to allow for parking for vehicles (garage door) or limited storage of maintenance equipment used in connection with the premises (standard exterior door) or entry to the living area (stairway or elevator).

e) The interior portion of such enclosed area shall not be partitioned or finished into separate rooms.
f) The interior grade of such enclosed area shall be at an elevation at or higher than the exterior grade.

(5) **Structures Constructed on Fill.** A residential or nonresidential structure may be constructed on a permanent land fill in accordance with the following:
a) The fill shall be placed in layers no greater than 1 foot deep before compacting to 95% of the maximum density obtainable with either the Standard or Modified Proctor Test method. The results of the test showing compliance shall be retained in the permit file.
b) The fill shall extend 10 feet beyond the foundation of the structure before sloping below the BFE.
c) The fill shall be protected against erosion and scour during flooding by vegetative cover, riprap, or bulkheading. If vegetative cover is used, the slopes shall be no steeper than 3 horizontal to 1 vertical.
d) The fill shall not adversely affect the flow of surface drainage from or onto neighboring properties.
e) The top of the lowest floor including basements shall be at or above the FPG.

(6) **Standards for Manufactured Homes and Recreational Vehicles.** Manufactured homes and recreational vehicles to be installed or substantially improved on a site for more than 180 days must meet one of the following requirements:
a) These requirements apply to all manufactured homes to be placed on a site outside a manufactured home park or subdivision; in a new manufactured home park or subdivision; in an expansion to an existing manufactured home park or subdivision; or in an existing manufactured home park or subdivision on which a manufactured home has incurred "substantial damage" as a result of a flood:
(i) The manufactured home shall be elevated on a permanent foundation such that the lowest floor shall be at or above the FPG and securely anchored to an adequately anchored foundation system to resist flotation, collapse, and lateral movement.
(ii) Fully enclosed areas formed by foundation and other exterior walls below the FPG shall be designed to preclude finished living space and designed to allow for the entry and exit of floodwaters to automatically equalize hydrostatic flood forces on exterior walls as required for elevated structures in Section 153.115(B)(4).
(iii) Flexible skirting and rigid skirting not attached to the frame or foundation of a manufactured home are not required to have openings.
b) These requirements apply to all manufactured homes to be placed on a site in an existing manufactured home park or subdivision that has not been substantially damaged by a flood:
(i) The manufactured home shall be elevated so that the lowest floor of the manufactured home chassis is supported by reinforced piers or other foundation elevations that are no less than 36 inches in height above grade and be securely anchored to an adequately anchored foundation system to resist flotation, collapse, and lateral movement.
(ii) Fully enclosed areas formed by foundation and other exterior walls below the FPG shall be designed to preclude finished living space and designed to allow for the entry and exit of floodwaters to automatically equalize hydrostatic flood forces on exterior walls as required for elevated structures in Section 153.115(B)(4).
(iii) Flexible skirting and rigid skirting not attached to the frame or foundation of a manufactured home are not required to have openings.
c) Recreational vehicles placed on a site shall either:
(i) be on site for less than 180 days;
(ii) be fully licensed and ready for highway use (defined as being on its wheels or jacking system, is attached to the site only by quick disconnect type utilities and security devices, and has no permanently attached additions); or

(iii) meet the requirements for "manufactured homes" as stated earlier in this section.

(7) **Accessory Structures.** Relief to the elevation or dry floodproofing standards may be granted for accessory structures. Such structures must meet the following standards:

a) Shall not be used for human habitation.
b) Shall be constructed of flood resistant materials.
c) Shall be constructed and placed on the lot to offer the minimum resistance to the flow of floodwaters.
d) Shall be firmly anchored to prevent flotation.
e) Service facilities such as electrical and heating equipment shall be elevated or floodproofed to or above the FPG.
f) Shall be designed to allow for the entry and exit of floodwaters to automatically equalize hydrostatic flood forces on exterior walls as required for elevated structures in Section 153.115(B)(4).

(8) **Above Ground Gas or Liquid Storage Tanks.** All above ground gas or liquid storage tanks shall be anchored to prevent flotation or lateral movement.

(C) Standards for Subdivision Proposals.

(1) All subdivision proposals shall be consistent with the need to minimize flood damage.
(2) All subdivision proposals shall have public utilities and facilities such as sewer, gas, electrical, and water systems located and constructed to minimize flood damage.
(3) All subdivision proposals shall have adequate drainage provided to reduce exposure to flood hazards.
(4) Base flood elevation data shall be provided for subdivision proposals and other proposed development (including manufactured home parks and subdivisions), which is greater than the lesser of fifty (50) lots or five (5) acres.

(D) Critical Facility. Construction of new critical facilities shall be, to the extent possible, located outside the limits of the SFHA. Construction of new critical facilities shall be permissible within the SFHA if no feasible alternative site is available. Critical facilities constructed within the SFHA shall have the lowest floor elevated to or above the FPG at the site. Floodproofing and sealing measures must be taken to ensure that toxic substances will not be displaced by or released into floodwaters. Access routes elevated to or above the FPG shall be provided to all critical facilities to the extent possible.

(E) Standards for Identified Floodways. Located within SFHAs, established in Section 153.113(B), are areas designated as floodways. The floodway is an extremely hazardous area due to the velocity of floodwaters, which carry debris, potential projectiles, and has erosion potential. If the site is in an identified floodway, the Floodplain Administrator shall require the applicant to forward the application, along with all pertinent plans and specifications, to the Indiana Department of Natural Resources and apply for a permit for construction in a floodway. Under the provisions of IC 14-28-1 a permit for construction in a floodway from the Indiana Department of Natural Resources is required prior to the issuance of a local building permit for any excavation, deposit, construction, or obstruction activity located in the floodway. This includes land preparation activities such as filling, grading, clearing and paving etc. undertaken before the actual start of construction of the structure. However, it does exclude non-substantial additions/improvements to existing (lawful) residences in a non-boundary river floodway. (IC 14-28-1-26 allows construction of a non-substantial addition/ improvement to a residence in a non-boundary river floodway without obtaining a permit for construction in the floodway from the Indiana Department of Natural Resources. Please note that if fill is needed to elevate an addition above the existing grade, prior approval for the fill is required from the Indiana Department of Natural Resources.)

No action shall be taken by the Floodplain Administrator until a permit or letter of authorization (when applicable) has been issued by the Indiana Department of Natural Resources granting approval for construction in the floodway. Once a permit for construction in a floodway or letter of authorization has been issued by the Indiana Department of Natural Resources, the Floodplain Administrator may issue the local Floodplain Development Permit, provided the provisions contained in Section 153.115 of this ordinance have been met. The Floodplain Development Permit cannot be less restrictive than the permit for construction in a floodway

issued by the Indiana Department of Natural Resources. However, a community's more restrictive regulations (if any) shall take precedence.

No development shall be allowed, which acting alone or in combination with existing or future development, that will adversely affect the efficiency of, or unduly restrict the capacity of the floodway. This adverse affect is defined as an increase in the elevation of the regulatory flood of at least fifteen-hundredths (0.15) of a foot as determined by comparing the regulatory flood elevation under the project condition to that under the natural or pre-floodway condition as proven with hydraulic analyses.

For all projects involving channel modifications or fill (including levees) the Floodplain Administrator shall submit the data and request that the Federal Emergency Management Agency revise the regulatory flood data per mapping standard regulations found at 44 CFR § 65.12.

(F) Standards for Identified Fringe. If the site is located in an identified fringe, then the Floodplain Administrator may issue the local Floodplain Development Permit provided the provisions contained in Section 153.115 of this ordinance have been met. The key provision is that the top of the lowest floor of any new or substantially improved structure shall be at or above the FPG.

(G) Standards for SFHAs without Established Base Flood Elevation and/or Floodways/Fringes.

(1) Drainage area upstream of the site is greater than one square mile:

If the site is in an identified floodplain where the limits of the floodway and fringe have not yet been determined, and the drainage area upstream of the site is greater than one square mile, the Floodplain Administrator shall require the applicant to forward the application, along with all pertinent plans and specifications, to the Indiana Department of Natural Resources for review and comment.

No action shall be taken by the Floodplain Administrator until either a permit for construction in a floodway (including letters of authorization) or a floodplain analysis/regulatory assessment citing the one-percent annual chance flood elevation and the recommended Flood Protection Grade has been received from the Indiana Department of Natural Resources.

Once the Floodplain Administrator has received the proper permit for construction in a floodway (including letters of authorization) or floodplain analysis/regulatory assessment approving the proposed development, a Floodplain Development Permit may be issued provided the conditions of the Floodplain Development Permit are not less restrictive than the conditions received from the Indiana Department of Natural Resources and the provisions contained in Section 153.115 of this ordinance have been met.

(2) Drainage area upstream of the site is less than one square mile:

If the site is in an identified floodplain where the limits of the floodway and fringe have not yet been determined and the drainage area upstream of the site is less than one square mile, the Floodplain Administrator shall require the applicant to provide an engineering analysis showing the limits of the floodplain and one-percent annual chance flood elevation for the site.

Upon receipt, the Floodplain Administrator may issue the local Floodplain Development Permit, provided the provisions contained in Section 153.115 of this ordinance have been met.

(3) The total cumulative effect of the proposed development, when combined with all other existing and anticipated development, shall not increase the regulatory flood more than 0.14 of one foot and shall not increase flood damages or potential flood damages.

(H) Standards for Flood Prone Areas. All development in known flood prone areas not identified on FEMA maps, or where no FEMA published map is available, shall meet applicable standards as required per Section 153.115.

153.116 VARIANCE PROCEDURES

(A) Designation of Variance and Appeals Board. The Board of Zoning Appeals shall hear and decide appeals and requests for variances from requirements of this ordinance.

(B) Duties of Variance and Appeals Board. The board shall hear and decide appeals when it is alleged an error in any requirement, decision, or determination is made by the Floodplain Administrator in the

enforcement or administration of this ordinance. Any person aggrieved by the decision of the board may appeal such decision to the Posey County Circuit Court.

(C) Variance Procedures. In passing upon such applications, the board shall consider all technical evaluations, all relevant factors, all standards specified in other sections of this ordinance, and;

(1) The danger of life and property due to flooding or erosion damage.
(2) The susceptibility of the proposed facility and its contents to flood damage and the effect of such damage on the individual owner.
(3) The importance of the services provided by the proposed facility to the community.
(4) The necessity to the facility of a waterfront location, where applicable.
(5) The availability of alternative locations for the proposed use which are not subject to flooding or
(6) The compatibility of the proposed use with existing and anticipated development,
(7) The relationship of the proposed use to the comprehensive plan and floodplain management program for that area.
(8) The safety of access to the property in times of flood for ordinary and emergency vehicles.
(9) The expected height, velocity, duration, rate of rise, and sediment of transport of the floodwaters at the site.
(10) The costs of providing governmental services during and after flood conditions, including maintenance and repair of public utilities and facilities such as sewer, gas, electrical, and water systems, and streets and bridges.

(D) Conditions for Variances.

(1) Variances shall only be issued when there is:
   a) A showing of good and sufficient cause.
   b) A determination that failure to grant the variance would result in exceptional hardship.
   c) A determination that the granting of a variance will not result in increased flood heights, additional threats to public safety, extraordinary public expense, create nuisances, cause fraud or victimization of the public, or conflict with existing laws or ordinances.
(2) No variance for a residential use within a floodway subject to Section 153.115(E) or (G)(1) of this ordinance may be granted.
(3) Any variance granted in a floodway subject to Section 153.115(E) or (G)(1) of this ordinance will require a permit from the Indiana Department of Natural Resources.
(4) Variances to the Provisions for Flood Hazard Reduction of Section 153.115(B), may be granted only when a new structure is to be located on a lot of one-half acre or less in size, contiguous to and surrounded by lots with existing structures constructed below the flood protection grade.
(5) Variances shall only be issued upon a determination that the variance is the minimum necessary, considering the flood hazard, to afford relief.
(6) Variances may be granted for the reconstruction or restoration of any structure individually listed on the National Register of Historic Places or the Indiana State Register of Historic Sites and Structures.
(7) Any applicant to whom a variance is granted shall be given written notice specifying the difference between the Flood Protection Grade and the elevation to which the lowest floor is to be built and stating that the cost of the flood insurance will be commensurate with the increased risk resulting from the reduced lowest floor elevation (See Section 153.116(E)).
(8) The Floodplain Administrator shall maintain the records of appeal actions and report any variances to the Federal Emergency Management Agency or the Indiana Department of Natural Resources upon request (See Section 153.116(E)).

(E) Variance Notification. Any applicant to whom a variance is granted that allows the lowest floor of a structure to be built below the flood protection grade shall be given written notice over the signature of a community official that:

(a) The issuance of a variance to construct a structure below the flood protection grade will result in increased premium rates for flood insurance up to amounts as high as $25 for $100 of insurance coverage; and;

(b) Such construction below the flood protection grade increases risks to life and property.

The Floodplain Administrator will maintain a record of all variance actions, including justification for their issuance.

(F) Historic Structure. Variances may be issued for the repair or rehabilitation of "historic structures" upon a determination that the proposed repair or rehabilitation will not preclude the structure's continued designation as an "historic structure" and the variance is the minimum to preserve the historic character and design of the structure.

(G) Special Conditions. Upon the consideration of the factors listed in Section 153.116, and the purposes of this ordinance, the Board of Zoning Appeals may attach such conditions to the granting of variances as it deems necessary to further the purposes of this ordinance.

153.117 SEVERABILITY

If any section, clause, sentence, or phrase of the Ordinance is held to be invalid or unconstitutional by any court of competent jurisdiction, then said holding shall in no way effect the validity of the remaining portions of this Ordinance.

153.118 EFFECTIVE DATE

This ordinance shall be in full force and effect on November 5, 2014.

Amended Posey County 8-5-14, Poseyville 8-13-14, Cynthiana 8-12-14, Mt. Vernon 9-4-14

153.120 Section Reserved for Future Provisions

153.130 Section Reserved for Future Provisions

153.140 USE UNITS

153.141 INTRODUCTION OF THE USE UNITS

(A) General. The Use Unit is a grouping of individual uses that have similarities in characteristics of function and/or performance which enable systematic consideration of location and other regulation. Within each zoning district, the permitted uses are the included uses of the designated Use Unit. The unit, herein established, are identified by number and name. Set forth in each Use Unit is a descriptive statement, an alphabetical listing of the included uses, use conditions, and off-street parking and loading requirements.

(B) Interpretation. Questions of the inclusion of a particular use within a Use Unit shall be decided by the Area Board of Zoning Appeals. A use, if specifically listed in a Use Unit, shall not be interpreted as being included as a principal use within any other Use Unit.

(C) Applicability of Use Conditions. A use shall be subject to the provisions of the district in which located and, in addition, shall be subject to the use conditions specified in the applicable Use Unit. Where the requirements of the Use Unit are greater than the requirements of the use district, the Use Unit requirements shall govern.

153.145 USE UNIT 0 ACTIVE AGRICULTURE

(A) Description: Active agricultural uses.

(B) Included Uses:

(1) horticulture, forestry, crop and tree farming

(2) dairy

(3) livestock, livestock facilities and livestock pasturing operation

(4) feed lot operations [Concentrated Feeding Operations (CFOs) and Confined Animal Feeding Operations (CAFOs) are permitted only by Special Exception, and shall meet all State and Federal requirements.]

(5) operation of any machinery or vehicle associated with agricultural production

(6) other uses customarily incidental thereto.

(C) Off-street Parking Requirements: None.

153.146 USE UNIT 1 AREAWIDE USES BY RIGHT

(A) Description: Certain public uses, agricultural uses, open land uses, and similar uses which are either subject to other public controls or which do not have adverse effects on other land uses.

(B) Included Uses:

(1) Passive agricultural uses such as: cultivation, forestry, planting

(2) Open land uses such as: arboretum, flood management project, reservoir, wildlife preserve

(3) Public uses such as: fire alarm, historical marker, street sign, thoroughfares, utility lines, and political campaign signs.

(C) Off-street Parking Requirements: None.

153.147 USE UNIT 2 AREA-WIDE SPECIAL EXCEPTION USES

(A) Description: Uses which in some instances may be suitable for location in any use district but, because of their potential adverse influence on adjacent properties, require site review and are, therefore, permitted in all use districts as a Special Exception requiring Board of Zoning Appeals approval.

(B) Included Uses:

(1) Adult Detention Facility, Correction Facility, Detention Facility, Jail, Prison
(2) Airport, heliport, private landing field
(3) Cemetery
(4) Convict Pre-Release Center
(5) Crematory
(6) Governmental Offices and Services, NEC (not elsewhere classified) – any building or structure leased or owned that is used by any department of local, state or federal government
(7) Hydroelectric Generation Plant
(8) Juvenile Delinquency Center
(9) Mausoleum
(10) Post Office
(11) Sewage Disposal Facility, Waste Water Treatment Plant
(12) Water Treatment Plant
(13) Temporary Open Air Activities such as:
  (a) Carnival
  (b) Circus
  (c) Construction Facilities (off site)
  (d) Tent Revival
(14) Residential Storage Structure (as amended Posey County 9-23-14, Poseyville 10-9-14, Cynthiana 10-14-14, Mt.Vernon 10-16-14)

(C) Use Conditions:

(1) Construction facilities:
  (a) The use may continue for a period not to exceed two (2) years in the same location.
  (b) Ingress and egress must be from arterial or collector streets, provided that the Zoning Board of Appeals may approve a location with access to a minor street upon finding that such location would not result in increased traffic on streets in residential areas.
  (c) The use shall not be located nearer than one hundred (100) feet to any lot containing an occupied dwelling without the consent of the owner thereof.
(2) Temporary open air activities, except construction facilities, may continue for a period not to exceed thirty (30) days per each application for Special Exception approved by the Board of Zoning Appeals.

(D) Off-Street Parking and Loading Requirements: Off-street parking and loading as may be required by the Board of Zoning Appeals in granting the Special Exception use.

153.148 USE UNIT 3 PUBLIC PROTECTION AND UTILITY FACILITIES

(A) Description: Public protection and utility facilities which may have technical location requirements necessitating specific locations in or around area services, and certain temporary open air land uses which can be objectionable to certain other uses and are, therefore, permitted in certain districts by Special Exception and in the remaining districts by right.

(B) Included Uses:

(1) Ambulance Service
(2) Electric Regulation Station, Electric Substation (Excluding storage or service garages and yards)
(3) Fire protection facility, Fire Station
(4) Pressure control station (gas or liquid, excluding storage or service garages and yards)
(5) Shelter (civil defense or storm)

(6) Services and Protection
(7) Transmitting tower (excluding amateur radio tower)
(8) Water storage facility NEC
(9) Other structures and appurtenances incidental to the maintenance and operation of utilities and services, radio, television, transmitter or tower

(C) Use Conditions: None.

(D) Off-street Parking and Loading Requirements: None.

153.149 USE UNIT 4 COMMUNITY SERVICES & SIMILAR USES

(A) Description: Community services, cultural and recreational and religious facilities and certain residential facilities which are needed in residential areas to serve the residents or need a residential environment, but which are or can be objectionable to nearby residential uses. These uses are permitted by Special Exception in some districts, by right in some districts, and prohibited in other districts.

(B) Included Uses:

(1) Aquarium
(2) Art Gallery (not operated for profit)
(3) Children's Nursery / Day Care Center
(4) Church
(5) College
(6) Community Center
(7) Cultural Facility, NEC
(8) Day Camp
(9) Emergency and Protective Shelters
(10) Golf Course
(11) Hospital
(12) Library
(13) Lodge (tax exempt)
(14) Marina
(15) Museum
(16) Nursery School
(17) Planetarium
(18) Private Club or Lodge (the chief activity which is a service and is not operated as a business or for profit, and which hold and maintain an income tax exempt status).
(19) Protective Shelter
(20) Public Park
(21) Public School
(22) Public Tennis Court
(23) Residential Treatment Center
(24) Schools, offering a compulsory education curriculum
(25) Transitional living center
(26) University

(C) Use Conditions:

(1) College, University, Hospital: A minimum site area of 1 acre shall apply.
(2) Residential Treatment Center, transitional living center, emergency or protective shelter: To avoid clustering, a residential treatment center, transitional living center, or emergency or protective shelter shall not be located on a lot within 1/4 mile (1,320 feet) from any other lot containing such facilities or any lot containing a neighborhood group home, community group home or detention/correctional facility.

(D) Off-street parking and loading requirements:

Use	Parking Spaces	Loading Berths
Aquarium Art Gallery Museum Planetarium Cultural Facility NEC	1 per 800 sq. ft. of floor area	1 per 10,000-200,000 sq.ft. plus 1 per Each additional 200,000 sq.ft. of floor area
Children's Nursery	1 per 40 sq.ft.	N/A
Church	1 per 40 sq.ft. chapel, sanctuary floor area	1 per 10,000-200,000 Sq.ft. Plus 1 per each additional 200,000 sq.ft. of floor area
College, University	1 per 600 sq.ft. Classroom floor area plus 1 per 4 dormitory beds Plus 1 per 4 stadium seats	1 per 10,000-200,000 sq.ft., plus 1 per each additional 200,000 sq.ft. of floor area
Community Center	1 per 500 sq.ft. of floor area	1 per 10,000-100,000 sq.ft., plus 1 per each additional 100,000 sq.ft. of floor area
Emergency and protective shelter	1 per 1,000 sq.ft. of floor area	1 per 10,000-100,000 sq.ft., plus 1 per each additional 100,000 sq.ft. of floor area
Hospital	1 per bed	1 per 10,000-100,000 sq.ft. Plus 1 per each additional 100,000 sq.ft. of floor area
Library	1 per 500 sq.ft. floor area	1 per 10,000-200,000 sq.ft. plus 1 per each additional 200,000 sq.ft. of floor area
Private Club	1 per 400 sq.ft. Floor area	1 per 10,000-100,000 sq.ft. plus 1 per each additional 100,000 sq.ft. of floor area
Public Park	1 per 4 stadium seats Plus 1 per 500 sq.ft. of Community center of recreation bldg plus 1 per 300 sq.ft. of pool area	1 per 10,000-100,000 sq.ft. Plus 1 per each additional 100,000 sq.ft.of floor area
Residential Treatment	1 per 1,000 sq.ft. of floor area	1 per 10,000-100,000 sq.ft.

Center/Transitional Living Center		Plus 1 per each additional 100,000 sq.ft. of floor area
Schools:		
Elementary and	1 per 1,000 sq.ft. of floor area	1 per 10,000-200,000 sq.ft.
Junior High		Plus 1 per each additional 200,000 sq.ft. of floor area
Senior High if parking areas are combined	1 per 800 sq.ft. of floor area plus 1 per 4 seats or Gymnasium seats	1 per 10,000-200,000 sq.ft. plus 1 per each additional stadium 200,000 sq.ft. of floor area
if parking is separate and if stadium does not exist	1 per 400 sq.ft. of floor area	
Tennis Court	2 per court plus 1 per 400 sq.ft. of Club House area	1 per 10,000-100,000 sq.ft. plus 1 per each additional 100,000 sq.ft. of floor area

See Section 153.180 for required minimum dimensions and design criteria for parking facilities.

153.150 USE UNIT 5 SINGLE-FAMILY DETACHED DWELLING

(A) Description: Single-Family detached dwelling

(B) Included uses:

(1) Single-Family detached dwelling

(2) Foster Home

(C) Use Conditions: None.

(D) Off-street parking and loading requirements:

Use	Parking Spaces	Loading Berths
Single-Family detached & Foster Home	2 per dwelling unit	N/A

See Section 153.180 for required minimum dimensions and design criteria for parking facilities.

153.151 USE UNIT 6 SINGLE-FAMILY ATTACHED DWELLING

(A) Description: Single-family attached dwellings.

(B) Included uses: Duplex, patio home, townhouse, quadruplex, zero lot-line dwellings

(C) Use Conditions:

(1) Townhouse: A townhouse development is subject to approval of a subdivisions plat by the Planning Commission in accord with existing laws and regulations, and the subsequent filing in the office of the County Clerk where the property is located.

(2) Quadruplex: A quadruplex development is subject to approval of a subdivisions plat by the Planning Commission in accord with existing laws and regulations, and the subsequent filing in the office of the County Clerk where the property is located.

(D) Off-Street Parking and Loading Requirements:

Use	Parking Spaces	Loading Berths
Single-Family Attached	2 per dwelling unit	None
Townhouse	1.5 per efficiency or 1 bedroom dwelling unit;	None

or more bedroom dwelling unit

See Section 153.180 for required minimum dimensions and design criteria for parking facilities.

153.152 USE UNIT 7 MULTIPLE-FAMILY DWELLING AND SIMILAR USES

(A) Description: Multifamily Dwellings, group homes, and Similar Uses

(B) Included uses:

(1) Apartment
(2) Apartment Hotel
(3) Bed-and-Breakfast
(4) Boarding House
(5) Convalescent Home
(6) Convent, Monastery, Novitiate
(7) Elderly/Retirement Housing
(8) Extended Care Facility
(9) Fraternity or Sorority House
(10) Group Home
(11) Multifamily Dwelling
(12) Nursing Home
(13) Resident Hotel
(14) Retirement Center
(15) Rooming/Boarding House
(16) Sanitarium
(17) Tourist Home

(C) Use conditions:

(1) Intensity of use:

(a) Fraternity, Sorority, Rooming/Boarding House: In the determination of the applicable bulk and area requirements a fraternity, sorority or rooming/boarding house shall be considered a multi-family dwelling, with each 600 square feet of floor area constituting a one-bedroom dwelling unit.

(b) Convent, monastery and novitiate, community group home, life care retirement center and nursing home: the maximum floor area ratio is .5.

(c) Covent, monastery, novitiate: A minimum site area of one (1) acre shall apply.

(2) Group home:

(a) Must be licensed by the State of Indiana, Indiana State Health Department and meet contracting standards of the state of Indiana Department of Human Services for group homes for mentally retarded persons.

(b) No building may be occupied after the effective date of this amendment until a Zoning Clearance Permit is obtained. This permit will be revoked automatically upon revocation or the State License.

(c) No signs advertising the neighborhood group home shall be permitted on the lot.

(d) No exterior alteration of the dwelling or any customary accessory structure shall be made which would detract from the residential character of the structure. Fire escapes, if required, must be located on the rear of the structure if architecturally feasible or on the side of the structure and screened.

(e) To avoid clustering, neighborhood group home shall not be located on a lot within 1/4 mile (1,320 feet) of any other lot containing a neighborhood group home, a community group home, a residential treatment center, a transitional living center, an emergency of protective shelter, or detention/correctional facility.

(3) Retirement center. The nursing facility or medical facility must be licensed by the State of Indiana, Indiana State Health Department as an intermediate care or a skilled nursing home.

(4) Nursing home: The nursing home must be licensed by the State of Indiana, Indiana State Health

Department as an intermediate care facility or as a skilled nursing home.

(D) Off-street parking and loading requirements:

Use	Parking Spaces	Loading Berths
Bed-and-Breakfast	1 per sleeping	1 per 10,000-200,000 sq.ft.
Convent, Monastery and Novitiate	1 per 1,000 sq.ft. of floor area	1 per 10,000-200,000 Plus 1 per each additional 200,000 sq. ft. of floor area
Elderly/Retirement Housing	0.75 per dwelling unit	None
Community Group Home	1 per 500 sq.ft. of floor	None
Fraternity or Sorority House	1 per 2 beds	None
Life Care	0.75 per dwelling unit	1 per 10,000-200,000
Retirement Center	and .35 per nursing center bed	Sq. ft. Plus 1 per each additional 200,00 sq. ft. of floor area
Multifamily Dwelling	1.5 per efficiency or 1 bedroom dwelling 2 per 2 or more bedroom dwelling unit	None
Nursing Home	3.5 per nursing center bed	1 per 10,000-100,000 sq. ft. plus 1 per each additional 100,000 sq. ft. of floor area
Rooming/ Boarding House/ Resident Hotel	1 per sleeping room	1 per 10,000-200,000 sq.ft. plus 1 per each additional 200,000 sq. ft.
Tourist Home	1 per sleeping room	1 per 10,000-200,000 sq.ft.

See Section 153.180 for required minimum dimensions and design criteria for parking facilities.

153.153 USE UNIT 8 MANUFACTURED or MODULAR HOME DWELLING

(A) Description: Manufactured or modular home

(B) Included uses: Manufactured or modular housing

(C) Use conditions: Manufactured or modular homes shall be permitted in all residential. office, and commercial/business districts as follows:

(1) Manufactured or Modular home shall:

(a) Have more than nine hundred and fifty (950) square feet of occupied space in a double-section or larger multi-section unit, with a minimum width of twenty-three (23) feet.

(b) Be placed onto a permanent under floor foundation in accordance with approved Installation Standards, as specified in Appendix E.

(c) Be placed onto a permanent perimeter foundation, in accordance with approved Installation Standards, as specified in Appendix E.

(d) Be anchored to the ground, in accordance with Installation Standards, as specified in Appendix

(e) Have the hitch mechanisms removed.

(f) Meet appropriate utility connections standards, in accordance with approved Installation Standards, as specified in Appendix E.

(2) Improvement Location Permit Required:

(a) Requirements:

(i) Prior to the location, relocation or establishment of any manufactured or modular home, the home owner or authorized representative shall secure from the plan commission's designated administrator.

(A) Improvement Location Permit. Permit states that the building and its location conform to the Comprehensive Plan and the Zoning Ordinance.

(ii) Each application for an Improvement Location Permit shall be accompanied by:

(A) Plot plans as required for all dwelling units, but which shall include manufacturer home data sheet (see Appendix E).

(B) An agreement signed by the home owner or authorized representative pledging compliance with the terms set by the Plan Commission in the Improvement Location Permit.

(b) Issuance of permit: After receipt of the information required for an Improvement Location Permit, the Plan Commission designated administrator shall review the standards set in this ordinance. If the applicant has met all required standards, the Improvement Location Permit shall be issued.

(c) Denial of permit: If any of the major elements do not comply with the standards, the Improvement Location permit will be denied, with a written statement specifying the reasons for the denial.

153.154 USE UNIT 9 MOBILE HOME DWELLING

(A) Description: Mobile home dwelling

(B) Included uses: Mobile home dwellings

(C) Off-street parking and loading requirements.

Use	Parking Spaces	Loading Berths
Mobile Home	2 per mobile home	None

153.155 USE UNIT 10 OFF-STREET PARKING AREAS

(A) Description: Off-street parking areas which are principal uses.

(B) Included uses: Off-street parking lots, garages and structures.

(C) Use conditions: Off-street parking areas shall conform to the design, lighting and improvement requirements for off-street parking contained in Section 153.180.

153.156 USE UNIT 11 OFFICES AND STUDIOS.

(A) Description: Offices, studios, medical and dental laboratories, and certain other compatible or supporting services.

(B) Included uses:

(1) Abstract company
(2) Accounting services
(3) Advertising agency
(4) Architectural services
(5) Artist's Studio
(6) Bank (without drive-through services)

Broadcasting or recording studio
(7) Chiropractor
(8) Computing service
(9) Copy service
(10) Credit Union without drive through services
(11) Data processing service
(12) Dental clinic and laboratory
(13) Dentist Office
(14) Doctor's Office
(15) Drafting service
(16) Employment agency
(17) Engineering and Surveying services
(18) Financial services (excluding banks, credit unions and savings & loan with drive-through services; pawn shop)
(19) General business offices, excluding on premise sale of merchandise
(20) Insurance services
(21) Interior design consultant (no retail sales)
(22) Loan Office (without drive-through services)
(23) Medical and dental offices, clinics, and laboratories
(24) Medical Clinic Lab
(25) Mini-storage buildings
(26) Office Building
(27) Offices and Studios
(28) Optician or optical offices and laboratories
(29) Photocopy
(30) Photography studio
(31) Pharmacy (provided that no sundry or other merchandise is sold or offered for sale)
(32) Radio station
(33) Tax services
(34) Transportation ticket office
(35) Travel agency
(36) Savings and Loan (without drive-through services)
(37) Veterinarian Clinic (small animals, all activities in building, no exterior runs)

(C) Use conditions:

(1) The uses included in Use Unit 11, when located on a lot which is abutting an R district, shall be screened from the abutting R district by the erection and maintenance of a screening wall or fence along the lot line or lines in common with the R district.

(2) Mini-storage buildings should be surrounded by fences or wall compatible with residential areas. Chair-line fences topped with barded or razor wire are inappropriate.

(D) Off-street parking and loading requirements:

Use	Parking Spaces	Loading Berths
Medical and Dental Offices, Clinics and Laboratories	1 per 250 sq.ft. of floor area	1 per 10,000- 100,000 Sq.ft. plus 1 per each additional 100,000 sq.ft. of floor area
Mini-storage	1 per 5,000 sq.ft. of floor area	N/A

Other uses	1 per 300 sq.ft.	same as above

See Section 153.180 for required minimum dimensions and design criteria for parking facilities.

153.157 USE UNIT 12 ENTERTAINMENT ESTABLISHMENTS AND EATING ESTABLISHMENTS OTHER THAN DRIVE-INS

(A) Description: Eating places offering on premise consumption of food and drink within the principal structure and/or providing carry-out service if no curb service is provided, and if no in-car on premise consumption is permitted, drinking establishments and/or entertainment establishments, dancing establishments and motion picture theaters (enclosed).

(B) Included uses:

(1) Eating Establishments
- (a) Cafe
- (b) Cafeteria
- (c) Coffee shop
- (d) Delicatessen
- (e) Eating Establishments other than Drive-In
- (f) Restaurant

(2) Entertainment and/or Drinking Establishments such as:
- (a) Bar
- (b) Dance Hall
- (c) Motion Picture Theater (enclosed)
- (d) Night Club
- (e) Tavern
- (f) Theater (enclosed)

(C) Use conditions: The uses included in Use Unit 12, when located within a district other than an residential or office district and located on a lot which is abutting a R or O district, shall be screened from the abutting R or O district by the erection and maintenance of a screening wall or fence along the lot line or lines in common with the R or O district.

(D) Off-street parking and loading requirements:

Use	Parking Spaces	Loading Berths
Eating Places	1 per 100 sq.ft. of floor area	1 per 5,000-10,000 sq.ft. plus 1 per each addition 15,000 sq.ft. of floor area
Entertainment and/or Drinking Establishments other than Theater	1 per 75 sq.ft. of floor area	1 per 5,000-10,000 sq.ft. plus 1 per each additional 15,000 sq.ft. of floor area
Motion Picture Theater or other indoor Theater	1 per 4 seats	same as above

See Section 153.180 for required minimum dimensions and design criteria for parking facilities.

153.158 USE UNIT 13 CONVENIENCE GOODS AND SERVICES

(A) Description: Retail trade and services establishments which are desirable conveniences in certain residential and office districts. Use Unit 13 is established to permit the location of convenience goods and services in certain environments in which commercial facilities of higher use intensity would be objectionable.

(B) Included uses:

(1) Retail trade establishments:
- (a) Drug store
- (b) Food (convenience)
- (c) Bakery
- (d) Candy and confection and/or nut store
- (e) Convenience store, convenient goods and services
- (f) Ice cream store
- (g) Nut store
- (h) Pharmacy

(2) Service establishments:
- (a) Automated Teller Machine
- (b) Banks with drive-through services
- (c) Barber shop
- (d) Beauty shop
- (e) Credit Unions with drive-through services
- (f) Dry cleaning pickup
- (g) Instant bank machine
- (h) Laundry pickup
- (i) Loan services with drive-through services
- (j) Savings and Loan with drive-through services

(C) Use conditions. The uses included in Use Unit 13, when located within a district other than an R or O district and located on a lot which is abutting an R or O district, shall be screened from the abutting R or O district by the erection and maintenance of a screening wall or fence along the lot line or lines in common with the R or O district.

(D) Off-street parking and loading requirements:

Use	Parking Spaces	Loading Berths
Retail Trade and Service Establishments	1 per 225 sq.ft. of floor area	1 per 5,000-10,000 sq.ft. plus each additional 15,000 sq.ft. of floor area

See Section 153.180 for required minimum dimensions and design criteria for parking facilities.

153.159 USE UNIT 14 SHOPPING GOODS AND SERVICES

(A) Description: Retail establishments engaged in the merchandising of shopping goods and services.

(B) Included uses:

(1) Retail trade establishments
- (a) Antique shop
- (b) Appliance store
- (c) Art gallery, commercial
- (d) Artist supply store
- (e) Automotive parts and accessories store
- (f) Bicycle shop
- (g) Book store
- (h) Business and office machine sales establishment
- (i) Butcher shop
- (j) Camera and photographic supply store
- (k) Carpet store
- (l) China, glass and metal ware store

(m) Clothing and accessories store
(n) Cosmetic shop
(o) Computer store
(p) Dairy store
(q) Department store
(r) Dressmaking shop
(s) Dry goods store
(t) Electronics store
(u) Florist shop
(v) Food specialty store
(w) Fur storage
(x) Furrier and Fur shop
(y) Garden supply shop
(z) Gift/Novelty/Souvenir shop
(aa) Gun Store
(bb) Grocery store
(cc) Hardware store
(dd) Health food
(ee) Hobby shop
(ff) Home furnishing store selling Appliances; China, glassware, metal ware; Draperies, curtains, upholstery; Floor coverings, carpet; Furniture
(gg) Jewelry repair
(hh) Jewelry shop
(ii) Leather goods and luggage store
(jj) Liquor store
(kk) Luggage store
(ll) Meat market
(mm) Medical, dental, and orthopedic appliances and supply
(nn) Musical instrument and supply store
(oo) Newsstand
(pp) Novelty store
(qq) Office furnishing establishment
(rr) Office machine sales
(ss) Office supplies store
(uu) Paint store
(vv) Pawn shop
(ww) Pet shop
(xx) Phonograph and record shop
(yy) Photography supply store
(zz) Picture frame store
(aaa) Radio and TV sales
(bbb) Reducing salon
(ccc) Shoe store
(ddd) Shopping goods and services
(eee) Souvenir shop
(fff) Sporting goods store
(ggg) Stationery store
(hhh) Stereo store
(iii) Supermarket
(jjj) Tailor shop

(kkk) Tanning salon
(lll) Television sales
(mmm) Tobacco store
(nnn) Toy shop
(ooo) Variety store
(ppp) Wall paper store
(qqq) Wig shop

(2) Retail Building material establishment, exclusive of fabrication or repair:
(a) Building materials
(b) Electrical supply
(c) Plumbing fixtures and shop

(3) Service establishments:
(a) Caterer
(b) Costume rental service
(c) Gun smith
(d) Interior decorating, with retail sales
(e) Locksmith
(f) Photo finishing
(g) Radio and Television repair
(h) Self service Laundromat, coin operated
(i) Shoe repair services
(j) Veterinarian Clinic/Hospital, excluding outside animal runs
(k) Watch and jewelry repair

(C) Use conditions:

(1) The uses included in Use Unit 14, when located on a lot which is abutting a R or O district, shall be screened from the abutting R or O district by the erection and maintenance of a screening wall or fence along the lot line or lines in common with the R or O district.

(2) Retail building material establishments as listed in 153.159(B)(2) above shall store materials in such a way that material DO NOT extend over and above the height of the screening wall.

(D) Off-street parking and loading requirements:

Use	Parking Spaces	Loading Berths
Furniture Store	1 per 300 sq.ft. of floor area	1 per 5,000-25.000 sq.ft. plus 1 per each additional 25,000 sq.ft. of floor area
All other uses	1 per 225 sq.ft. of floor area	1 per 5,000-25,000 sq.ft. plus 1 per each additional 25,000 sq.ft. of floor area

See Section 153.180 for required minimum dimensions and design criteria for parking facilities.

153.160 USE UNIT 15 OTHER TRADES AND SERVICES

(A) Description: Trade establishments primarily providing business and household maintenance goods and services ordinarily not found in the primary retail districts because of differing market and site requirements.

(B) Included uses:

(1) Trade establishments, including incidental fabricating, processing, installation, and repair:

(a) Trade establishments
  (i) air conditioning and heating
  (ii) bait shops
  (iii) bakery, wholesale
  (iv) bottled gas
  (v) decorating, interior (without retail sales)
  (vi) fence sales and installation
  (vii) flea market, permanent
  (viii) general merchandising establishments, NEC
  (ix) glass store
  (x) greenhouse, retail sales
  (xi) heating equipment
  (xii) ice plant
  (xiii) lumber yard (materials enclosed or screened from public view)
  (xiv) model homes (for display only)
  (xv) monument (excluding shaping)
  (xvi) newspaper printing and publishing
  (xvii) other trades and service, NEC
  (xviii) nursery, horticulture sales
  (xix) plastic materials
  (xx) plumbing shop
  (xxi) portable storage building sales
  (xxii) printing and publishing
  (xxiii) reproduction services
  (xxiv) vending machines sales and services
(b) Sexually Oriented Business (allowed only as a Special Exception see 153.270 and 153.246(C)(4).
  (i) Arcade
  (ii) Adult Book Store
  (iii) Massage Parlor
  (iv) Adult Amusement Center

(2) Service establishment:
(a) Building services:
  (i) cesspool cleaning services
  (ii) disinfecting and exterminating services
  (iii) janitorial services
  (iv) window cleaning
(b) Other services:
  (i) dry cleaning/laundry, including coin operated (1,500 sq.ft. maximum floor area)
  (ii) funeral home
(c) Contract construction services (all activities enclosed and materials stored in structure):
  (i) air conditioning
  (ii) carpentry
  (iii) decorating
  (iv) electrical
  (v) fence installation
  (vi) furnace cleaning and repair
  (vii) landscape contractor
  (viii) painting contractor
  (ix) paper hanging

(x) plastering
(xi) plumbing
(xii) sign painting
(xiii) tile setting

(d) Business services: Armored Car Service

(e) Personal services:
(i) auctioneer
(ii) bindery
(iii) cabinet maker
(iv) drapery service
(v) frozen food locker
(vi) kennel
(vii) laundry
(viii) linen supply
(ix) packing and crating of household and other similar goods
(x) rug and carpet cleaning
(xi) taxidermist
(xii) veterinarian (outside cages and exterior animal runs)
(xiv) woodworking shop

(f) Repair services:
(i) appliance repair, household
(ii) armature rewinding service
(iii) business machine repair
(iv) carpet installation and repair
(v) computer repair
(vi) data processing machine repair
(vii) electrical repair service
(viii) furniture repair
(ix) mattress and pillow repair
(x) re-upholstery
(xi) rug repair

(e) Recycling Center/Collection Point (aluminum, glass, paper and plastics)

(3) Schools:
(a) Art
(b) Ballet
(c) Barber
(d) Beauty
(e) Business
(f) Dance
(g) Drama
(h) Fine Arts
(i) Language
(j) Modeling
(k) Music
(l) Trade

(C) Use conditions: The uses included in Use Unit 15, when located on a lot which is abutting a R or O district, shall be screened from the abutting R or O district by the erection and maintenance of a screening wall or fence along the lot line or lines in common with the R or O district.

(D) Off-street parking and loading requirements:

Use	Parking Spaces	Loading Berths

Funeral Home	1 per 40 sq.ft. of assembly floor area plus 1 per 300 sq.ft. of non-assembly area	1 per 10,000-100,000 sq.ft., plus 1 per each additional 100,000 sq.ft. of floor area
Trade Establishments	1 per 400 sq.ft. of floor area	1 per 5,000-25,000 sq.ft., plus 1 per each additional 25,000 sq.ft. of floor area
Service Establishments	1 per 400 sq.ft. of floor area	1 per 5,000-25,000 sq.ft., plus 1 per each additional 25,000 sq.ft. of floor area
Schools	1 per 400 sq.ft. of floor area	same as above

See Section 153.180 for required minimum dimensions and design criteria for parking facilities.

153.161 USE UNIT 16 GASOLINE SERVICE STATIONS

(A) Description: Establishment engaged in the retail sale of gasoline, lubricants, tires, batteries, and automobile accessories and performing minor repair, installation and maintenance services.

(B) Included uses:

(1) Gasoline service stations
(2) Filling station
(3) Oil and Lubrication Service
(4) Service station
(5) Tune-up Service

(C) Use conditions: The uses included in Use Unit 16, when located on a lot which is abutting a R or O district, shall be screened from the abutting R or O district by the erection and maintenance of a screening wall or fence along the lot lines in common with the R or O district.

(D) Off-street parking and loading requirements: Not applicable.

153.162 USE UNIT 17 AUTOMOTIVE AND ALLIED ACTIVITIES

(A) Description: Automotive and allied activities

(B) Included uses.

(1) Sales:
    (a) Agriculture Implement
    (b) Aircraft
    (c) Automobiles (new and used)
    (d) Boat
    (e) Camper
    (f) Mobile Home
    (g) Motorcycle
    (h) Recreational Vehicles
    (i) Trailers

(j) Truck

(2) Services:

(a) Auto Wash
(b) Automobile Rental
(c) Automobile Paint and Body Shop
(d) Automobile Repair and Service
(e) Bus Station
(f) Trailer Rental
(g) Truck Rental
(h) Vehicle Paint and Body Shop
(i) Vehicle Repair and Service
(j) Taxi Service

(C) Use conditions: The uses included in Use Unit 17, when located on a lot which is abutting a R or O district, shall be screened from the abutting R or O district by the erection and maintenance of a screening wall or fence along the lot line or lines in common with the R or O district.

(D) Off-street parking and loading requirements:

Use	Parking Spaces	Loading Berths
Agricultural implements automotive mobile home, camper, truck and motorcycle	1 per 600 sq.ft. of floor area plus 1 per 1,000 sq.ft. of open air display storage or service area	1 per 5,000-10,000 sq. ft. plus 1 per each additional 15,000 sq.ft. of floor area
Automobile rental	1 per 600 sq.ft. of floor area plus adequate off-street parking for storage of rental vehicles. No on-street parking or vehicles shall be permitted	N/A
Vehicle repair	1 per 600 sq.ft. of floor area	N/A
Auto wash	N/A	N/A

See Section 153.180 for required minimum dimensions and design criteria for parking facilities.

153.163 USE UNIT 18 DRIVE-IN RESTAURANTS

(A) Description: Eating establishments providing window or curb service, or offering food or drink for on-premise consumption within parked motor vehicles, or permitting the on premise consumption of food or drink within the parked motor vehicle or outside the principal structure.

(B) Included uses: Drive-in restaurants

(C) Use conditions: The uses included in Use Unit 18, when located on a lot which is abutting an R district, shall be screened from the abutting R district by the erection and maintenance of a screening wall or fence along the lot line or lines in common with the R district.

(D) Off-street parking and loading requirements:

Use	Parking Spaces	Loading Berths
Drive-in Restaurants	Min. 10 spaces	1 per 5,000-25,000 sq.ft. plus 1 per

		each additional 25,000 sq.ft. of floor area

See Section 153.180 for required minimum dimensions and design criteria for parking facilities..

153.164 USE UNIT 19 HOTEL, MOTEL AND RECREATION FACILITIES

(A) Description: Overnight lodging and commercial amusement establishments ordinarily not requiring large sites and which have use characteristics permitting their location in or near developed commercial trade areas.

(B) Included uses:

(1) Billiard Parlor
(2) Bowling Alley
(3) Commercial Recreation Establishments (enclosed), NEC
(4) Gymnasium
(5) Health Club
(6) Hotel
(7) Ice Skating
(8) Miniature Golf
(9) Motel
(10) Racquetball Club
(11) Rifle Range (enclosed)
(12) Skating Rink (enclosed)
(13) Slot Car Track
(14) Swimming Pool (enclosed)
(15) Tennis Club
(16) Video Games Arcade (not an adult amusement center)

(C) Use conditions: The uses included in Use Unit 19, when located on a lot which is abutting a R or O district, shall be screened from the abutting R or O district by the erection of a screening wall of fence along the lot line or lines in common with the R or O district.

(D) Off-street parking and loading requirements:

Use	Parking Spaces	Loading Berths
Hotel, Motel	1 per sleeping room plus 1 per 225 sq.ft. of accessory facilities such as flower shop, & beauty and barber shops etc., and 1 per 100 sq.ft. for facilities such as restaurants & taverns.	1 per 40,000-150,000 sq.ft. plus 1 per each additional 150,000 sq.ft. of floor area, plus 1 per 5,000-25,000 sq.ft. of accessory facilities
All other uses	1 per 225 sq.ft.	1 per 5,000-25,000 sq.ft. plus 1 per each additional 25,000 sq.ft. of floor area.

See Section 153.180 for required minimum dimensions and design criteria for parking facilities.

153.165 USE UNIT 20 COMMERCIAL RECREATION: INTENSIVE

(A) Description: Commercial recreation facilities, the principal activities of which are usually open air, located in undeveloped outlying sections of the urban area.

(B) Includes uses:

(1) Amusement Activities, NEC
(2) Arena
(3) Campground
(4) Drag Strip
(5) Drive-in Theatre
(6) Fairgrounds
(7) Go-cart Track
(8) Golf Driving Range
(9) Miniature Auto Track
(10) Outdoor Recreation, NEC
(11) Race Tracks (auto, dog, horse)
(12) Rifle and Skeet Range/gun club
(13) Rodeo Grounds
(14) Skateboard Track
(15) Stadiums, NEC
(16) Water slide (outdoor)

(C) Use conditions: The uses included in Use Unit 20, when located on a lot which is abutting a R or O district, shall be screened from the abutting R or O district by the erection and maintenance of a screening wall or fence along the lot line or lines in common with the R or O district.

(D) Off-street parking and loading requirements:

Use	Parking Spaces	Loading Berths
Golf driving	1 per tee	N/A
Drive-In Theatre	N/A	N/A
Uses providing Spectator Seating such as stadiums arenas and rodeo grounds	1 per 4 seats	1 per 5,000-25,000 sq.ft. plus 1 per each additional 25,000 sq.ft. of floor area.
Other Uses	1 per 800 sq.ft. of site area	1 per 5,000-25,000 sq.ft. plus 1 per each additional 25,000 sq.ft. of floor area

See Section 153.180 for required minimum dimensions and design criteria for parking facilities.

153.166 USE UNIT 21 BUSINESS SIGNS AND OUTDOOR ADVERTISING

(A) Description: Business (on-premises) signs and outdoor advertising (off-premises and billboard) signs. (See Appendix C: Zoning Sign Standards for summary of requirements.)

(B) Included uses: Business (on-premises) signs and outdoor advertising (off-premises and billboard) signs

(C) General location requirements:

(1) A sign may not be erected or placed in any district with the exception of those signs listed in Sections D(2) and K until an Improvement Location Permit has been issued by the Area Plan Commission

and written consent has been obtained from the owner or lessee of the premises on which the display is located. Items needed for an Improvement Location Permit include a plot plan showing the exact location of the display relative to property (right-of-way) lines, and frontal elevation showing the size and height above the street.

(2) Street Setback- signs or portions thereof shall not be permitted in the right-of-way of any street or area designated as a future street under any circumstances except authorized traffic signals, signs or devices.

(3) Intersection Setback - Signs shall not be located within twenty-five (25) feet from the intersection of the right-of-way lines of two (2) streets or from the intersection of street pavement and a railroad track. If there is no dedicated roadway right-of-way, the right-of-way is assumed to be based on the applicable roadway functional class as if the roadway had been dedicated (being from the street center line 25 feet for a "local street," 40 feet for a "collector" or "secondary arterial," 60 feet for a "primary arterial," and 75 feet for a "divided primary arterial".

(4) Traffic Signal Clearance - Signs shall not be located in such a manner as to obstruct or obscure or in any manner interfere with any traffic signal light or public warning sign.

(5) Obstruction of View - Signs which when located in such a manner so as to prevent any motorists from obtaining a clear view of approaching vehicles for a distance of five hundred (500) feet along an expressway or other public right-of-way, are prohibited.

(6) Business (on-premises) and/or outdoor advertising (off-premises) signs shall not be located within a fifty-foot radius of an R district property line if visible from such property.

(7) Flashing signs shall not be located within two hundred (200) feet of an abutting R district property line if visible from such district.

(8) Flashing signs shall not be located within fifty (50) feet of the edge of pavement of a signaled intersection of two (2) streets or the intersection of a street pavement and a railroad track.

(9) The flashing or animated (moving images) portion of any sign shall not be located within one (1) foot of the street right-of-way or ten (10) feet of the edge of pavement, whichever is less, as measured along the ground from the right-of-way line or edge of pavement to a vertical line coinciding with the leading edge of the sign nearest to the public way.

(10) Flashing signs shall not use incandescent bulbs with greater than twenty-five (25) watts illumination, nor use any other color than white, nor use strobe lights of any kind.

(11) No sign shall use rotating or revolving beams of light.

(12) No sign shall be animated (moving images), including electronic message boards, in the Agriculture, Residential, Office and B-1/CN districts, but may be approved by the Board of Zoning Appeals through a Special Exception permit in the B-1A/CS, B-2/CG, B-3/CH, CBD, M-1 and M-2 Districts as described in Subsection N below.

(13) Any roof, projection, ground, outdoor advertising or portable sign shall maintain a minimum separation of thirty (30) feet from any other roof, projection, ground, outdoor advertising or portable sign.

(D) General use conditions:

(1) Computation of display surface area. Only one side of a double-faced sign shall be included in the computation of display surface area.

(2) Signs not included in computation/display area. The following signs shall not be prohibited by this chapter nor be included in the computation of display surface area:

(a) Nameplates, attached to the face of the wall and not exceeding two (2) square feet in surface area.

(b) Temporary real estate and construction signs may be located on each arterial street frontage of the development. The sign shall not exceed one half of a square foot for each lineal foot of arterial street frontage; provided, however, that in no event shall the sign be restricted less than thirty-two (32) square feet or be permitted to exceed four hundred (400) square feet of display surface area.

(c) Signs which are not visible from a public street.

(d) Tablets built into the wall of a building or other structure and used for inscriptions or a memorial tablets or historic markers or for similar purposes.

(e) Signs of warning, directive, informational or instructional nature erected by a public utility, franchised transportation company or governmental agency, or endorsed by a local legislative body.

(f) Legal notices and street numbers.

(g) Election campaign signs.

(h) Signs located within a building.

(i) Signs not exceeding three (3) square feet of display surface area of a warning, directive or instructional nature, including entrance, exit and restroom signs.

(j) Signs which are attached labels of a commodity offered for sale.

(k) Flags and insignia of a governmental unit, church or organization.

(l) An exempt sign may be illuminated, but may not be flashing or animated.

(3) Computation of display surface area. In computing permitted display surface area, the lineal footage of an abutting non-arterial street shall not be combined with the lineal footage of any abutting arterial street which is included in the computation of permitted display surface area. The lineal footage of the street abutting the front of the property shall be used for computation of the surface area of the ground sign and the lineal frontage of the street abutting the side of the property shall only be added to the computation of the surface area if the side street is of equal or higher functional classification.

(4) Ground sign setback. Ground signs shall be setback at least one (1) foot from the property line and shall not encroach on the public right-of-way If there is no dedicated roadway right-of-way, the right-of-way is assumed to be based on the applicable roadway functional class as if the roadway had been dedicated (being from the street center line 25 feet for a "local street," 40 feet for a "collector" or "secondary arterial," 60 feet for a "primary arterial," and 75 feet for a "divided primary arterial".

(5) Sign permit. Signs that have not been issued a sign permit shall not be located in any district. Each sign requiring a permit shall display the permit number.

(6) Promotional signs. Promotional signs such as tinsel advertising flags, searchlights, balloons and banners shall be placed no earlier than fourteen (14) days prior to and removed within seven (7) days after a promotional ends and shall be maintained in a clean, non-offensive, safe and reasonable condition, and not be placed within the street ride-of-way or sidewalk while displayed.

(7) Number of sign per lot of record. Except for wall, canopy and promotional business signs, the maximum number or signs per lot of record shall be as follows:

(a) B-1/CN, B-1A/CS, B-2/CG, B-3/CH Districts - one per 100 feet of arterial street frontage or fraction thereof.

(b) M-1 Districts -- one per 150 feet of arterial street frontage or fraction thereof.

(c) M-2 District - one per 200 feet of arterial street frontage or fraction thereof.

(8) Roof Signs. Roof signs are prohibited from and after the effective date of this ordinance. Existing roof signs may continue as regulated by 153.200 through 153.208, Nonconforming Uses. Existing roof signs shall be included in the computation or permitted display surface area, number of signs per lot and spacing of signs.

(9) Wall, canopy and projecting signs - height. Wall, canopy and projecting signs shall not exceed above the top of the parquet or building wall on which it is located; provided, however, that in instances where the height of the parquet or building wall, or where construction or architectural features will not permit a wall sign of at least three (3) feet in height, a wall sign may extend above the parquet or building wall a distance which will permit a sign of at least three (3) feet in height. In no instance shall the wall, canopy or projecting sign be greater than six (6) about the top of the canopy nor be greater in height than a ground sign at that setback distance from the property line.

(E) B-1/CN District use conditions:

(1) Ground signs shall not exceed twenty-five (25) feet in height, measured from the mean curb level of the lot upon which it is erected.

(2) Wall and canopy signs shall not exceed an aggregate display surface area of three (3) square feet per each lineal foot of the building wall to which the sign or signs are affixed, shall not exceed twenty (20) percent of the façade area, and shall not exceed an aggregate display surface area of two hundred (200)

square feet.

(3) Other signs, including but not limited to roof, projecting, ground and portable signs (except wall, canopy and promotional business signs), whether permitted as provided herein or nonconforming, shall not exceed an aggregate display surface area of two (2) square feet per each lineal floor of street frontage if only one (1) such sign is erected; shall not exceed one (1) square foot per each lineal foot of street frontage if more than one (1) such sign is erected; and shall not exceed two hundred (200) square feet of face area for any side of any sign regardless of the setback.

(4) An unimproved lot may, as a matter or right, erect a Real Estate Sign on each public street front not to exceed 15 feet in height and eight (8) square feet to be setback at least one foot from the front (or side street) property line.

(5) Animated (moving image) or electronic message board (changing image) are prohibited in this district.

(F) B-1A/CS Districts use conditions:

(1) Ground signs shall not exceed thirty (30) feet in height, measured from the mean curb level of the lot upon which it is erected.

(2) Wall and canopy signs shall not exceed an aggregate display surface area of three (3) square feet per each lineal foot of the building wall to which the sign or signs are affixed, shall not exceed twenty (20) percent of the façade area, and shall not exceed an aggregate display surface area of three hundred (300) square feet

(3) Other signs, including, but not limited to roof, projecting, ground, and portable signs (except wall, canopy and promotional business signs), whether permitted as provided herein, or nonconforming, shall not exceed an aggregate display surface area of two (2) square feet per each lineal floor of street frontage if only one (1) such sign is erected; shall not exceed one- (1) square foot per each lineal foot of street frontage if more than one (1) such sign is erected; and shall not exceed three hundred (300) square feet of face area for any side of any sign regardless of the setback.

(4) An unimproved lot may, as a matter or right, erect a Real Estate Sign on each public street front not to exceed 15 feet in height and eight (8) square feet to be setback at least one foot from the front (or side street) property line.

(5) If any sign is animated (moving image) or electronic message board (changing image), the sign may be permitted only by the Board of Zoning Appeals through a Special Exception Permit as described in Subsection N below.

(G) B-2/CG Districts use conditions:

(1) Ground signs shall not exceed thirty-five (35) feet in height, measured from the mean curb level of the lot upon which it is erected.

(2) Wall and canopy signs shall not exceed an aggregate display surface area of three (3) square feet per each lineal foot of the building wall to which the sign or signs are affixed, shall not exceed twenty (20) percent of the façade area, and shall not exceed an aggregate display surface area of five hundred (500) square feet

(3) Other signs, including, but not limited to roof, projecting, ground, portable and outdoor advertising (off-premises) signs (except wall, canopy and promotional business signs), whether permitted as provided herein, or nonconforming, shall not exceed an aggregate display surface area of three (3) square feet per each lineal floor of street frontage if only one (1) such sign is erected; shall not exceed one and one-half (1.5) square foot per each lineal foot of street frontage if more than one (1) such sign is erected; and shall not exceed five hundred (500) square feet of face area for any side of any sign regardless of setback.

(4) An unimproved lot may, as a matter of right, erect outdoor advertising (off-premise) signs not to exceed an aggregate surface area of five hundred (500) square feet, if located behind the building setback line, provided that upon the occupancy of any building on the lot, any sign not complying with the display surface area limitations set out above shall be removed within thirty (30) days from such occupancy.

(5) Outdoor advertising (off-premises) signs shall also comply with the requirements set forth in Subsection J below.

(6) If any sign is animated (moving image) or electronic message board (changing image), the sign may be permitted only by the Board of Zoning Appeals through a Special Exception Permit as described in Subsection N below.

(H) B-3/CH and M District Use Conditions:

(1) Ground signs shall not exceed fifty (50) feet in height, measured from the mean curb level of the lot upon which it is erected.

(2) Wall and canopy signs shall not exceed an aggregate display surface area of three (3) square feet per each lineal foot of the building wall to which the sign or signs are affixed, shall not exceed twenty (20) percent of the façade area, and shall not exceed an aggregate display surface area of seven hundred (700) square feet

(3) Other signs, including, but not limited to roof, projecting, ground, portable and outdoor advertising (off-premises) signs (except wall, canopy and promotional business signs), whether permitted as provided herein, or nonconforming, shall not exceed an aggregate display surface area of three (3) square feet per each lineal floor of street frontage if only one (1) such sign is erected; shall not exceed one and one-half (1.5) square foot per each lineal foot of street frontage if more than one (1) such sign is erected; and shall not exceed seven hundred (700) square feet of face area for any side of any sign regardless of setback.

(4) An unimproved lot may, as a matter of right, erect outdoor advertising (off-premise) signs not to exceed an aggregate surface area of five hundred (500) square feet, if located behind the building setback line, provided that upon the occupancy of any building on the lot, any sign not complying with the display surface area limitations set out above shall be removed within thirty (30) days from such occupancy.

(5) Outdoor advertising (off-premises) signs shall also comply with the requirements set forth in Subsection J below.

(6) If any sign is animated (moving image) or electronic message board (changing image), the sign may be permitted only by the Board of Zoning Appeals through a Special Exception Permit as described in Subsection N below.

(I) CBD Use Conditions (signs only by Special Exception):

(1) Ground signs shall not exceed thirty-five (35) in height, measured from the mean curb level of the lot upon which it is erected.

(2) Wall and canopy signs shall not exceed an aggregate display surface area of three (3) square feet per each lineal foot of the building wall to which the sign or signs are affixed, shall not exceed twenty (20) percent of the façade area, shall not be higher than six (6) feet above the canopy, and shall not exceed an aggregate display surface area of one hundred fifty (150) square feet.

(3) Other signs, including, but not limited to roof, projecting, ground, and portable signs (except wall, canopy and promotional business signs), whether permitted as provided herein, or nonconforming, shall not exceed an aggregate display surface area of three (3) square feet per each lineal floor of street frontage if only one (1) such sign is erected; shall not exceed one and one-half (1.5) square foot per each lineal foot of street frontage if more than one (1) such sign is erected; and shall not exceed one hundred fifty (150) square feet of face area for any side of any sign regardless of setback.

(4) An unimproved lot may, as a matter of right, erect outdoor advertising (off-premise) signs not to exceed an aggregate surface area of five hundred (500) square feet, if located behind the building setback line, provided that upon the occupancy of any building on the lot, any sign not complying with the display surface area limitations set out above shall be removed within thirty (30) days from such occupancy.

(5) Outdoor advertising (off-premises) signs are prohibited in this district.

(6) If any sign is animated (moving image) or electronic message board (changing image), the sign may be permitted only by the Board of Zoning Appeals through a Special Exception Permit as described in Subsection N below.

(J) Use conditions for outdoor advertising (off-premises) signs:

(1) An outdoor advertising (off-premises) sign shall be separated a minimum distance of twelve hundred (1200) feet from any other outdoor advertising sign on the same side of the street and not within a six hundred (600) foot radius of any other outdoor advertising sign.

(2 Outdoor advertising (off-premises) signs shall not be within one hundred fifty (150) feet of a Residential or Office District.

(3) No portion of an outdoor advertising shall be within ten (10) feet of a major thoroughfare.

(4) Outdoor advertising signs shall not contain more than two (2) sides, not shall the total display surface area for each side exceed five hundred (500) square feet in the B-2/CG District and seven hundred (700) square feet in the B-3 and M Districts. The two (2) sides shall face in opposite directions. "Opposite" shall in addition to its ordinary meaning include V-shaped signs when not more than fifteen (15) feet separated the open side of the display surfaces.

(5) Outdoor advertising signs shall be oriented to be visible from the adjacent major thoroughfare.

(6) Outdoor advertising signs shall not exceed thirty-five (35) feet in height in the B-2/CG District and fifty (50) feet in height in the B-3/CH and M Districts.

(7) The aggregate display surface for all ground roof or projecting signs whether business (on-premises) or outdoor advertising (off-premises), shall not exceed the display surface area permitted in the zoning district where located.

(8) If an outdoor advertising sign is animated (moving image) or electronic message board (changing image), the sign may be permitted only by the Board of Zoning Appeals through a Special Exception Permit as described in Section N.

(K) Portable signs:

(1) Portable signs shall comply with all other provisions of this Ordinance. No portable sign shall be placed on a sidewalk. No portable sign shall flash on or off nor be animated, but be of a continuous light.

(2) No portable sign shall be permitted in the right-of-way of a public street, any sign situated in the right-of-way of a public street for a continuous period exceeding twenty-four (24) hours is hereby declared a public nuisance endangering public safety and may be impounded by the Area Plan Commission or any Police Officer of the local jurisdiction.

(L) Non-commercial signs: Nothing contained in this Ordinance shall prevent the use of the permitted display surface area, in whole or in part, on any sign authorized by the Ordinance and wherever located and/or being used Non-Commercial message.

(M)Prohibited signs:

(1) Signs that have not been issued a sign permit shall not be located in any district, with the exception of signs in Sections D and K.

(2) Signs or posters affixed to telephone and utility poles, trees, street signs, or other structures in the public right-of-way.

(3) A sign placed over or in a public right-of-way, public street right-of-way, or public road.

(4) A sign erected at a location where it may interfere with, obstruct the view of, or be confused with a traffic or railroad sign or signal, or oncoming traffic, or where it would pose a traffic hazard.

(5) Display lights resembling danger, emergency or traffic signal lights.

(6) Use the words "stop", "danger", or "look" or any other words which would confuse traffic.

(7) Use rotating or revolving beams of light.

(8) Signs which move or rotate, or which have moving parts or pieces.

(9) Animated (moving images) or electronic message boards (changing images) unless approved by the Board of Zoning Appeals through a Special Exception permit per Section N.

(10) Strobe lights.

(11) Placement or projection of a sign nearer than one-foot of a street right-of-way line or assumed right-of-way based on the functional class of the road if there is no dedicated right-of-way.

(N) Animated (moving images) or electronic message board (changing imaged) signs.

(1) Business (on-premises) signs or outdoor advertising/billboard (off-premises) signs that are animated (moving images) or have electronic message boards (changing images) shall only be permitted through a Special Exception permit approved by the Board of Zoning Appeals.

(2) Moving images or changing images shall not change more frequently than eight (8) second intervals.

(3) Shall have automatic dimmers so that night time lumens do not exceed those of the daylight hours.
(4) Such meet all other applicable conditions as set forth in Section 153.166.

153.167 USE UNIT 22 RESEARCH AND DEVELOPMENT

(A) Description: Facilities for scientific research, development and testing, which are customarily located on large, landscaped sites and the operation of which does not produce objectionable environmental effects.
(B) Included uses: Enclosed scientific research, testing and development.
(C) Use conditions: The uses included in Use Unit 22, when located on a lot which is abutting an R or O District, shall be screened from the abutting R or O District, by the erection and maintenance of a screening wall or fence along lot line or lines in common with the R or O District.
(D) Off-street parking and loading requirements:

Use	Parking Spaces	Loading Berths
All Uses	1 per 300 sq.ft.	1 per 5,000-40,000 sq.ft. or floor area plus 1 per 40,000-100,000 sq.ft. plus 1 per each additional 100,000 sq.ft. of floor area

See Section 153.180 for required minimum dimensions and design criteria for parking facilities.

153.168 USE UNIT 23 WAREHOUSING AND WHOLESALING

(A) Description: Warehousing, Wholesaling and Trucking often located adjacent to areas served by rail and highway transportation and port areas.
(B) Included uses:
(1) Moving and Storage Facilities
(2) Warehouses, NEC
(3) Wholesale Establishments, NEC
(4) Storage, NEC
(5) Trucking Establishments
(6) Truck Rentals
(**C) Use conditions:** The uses included in Use Unit 23, when located on lot which is abutting the boundary of an R District, shall be screened from the abutting R District by the erection and maintenance of a screening wall or fence along the lot line or lines in common with the R District.
(D) Off-street parking and loading requirements:

Use	Parking Spaces	Loading Berths
All Uses	1 per 3,000 sq.ft. of floor area	1 per 5,000-25,000 sq.ft. per each additional 25,000 sq.ft. of floor area

See Section 153.180 for required minimum dimensions and design criteria for parking facilities.

153.169 USE UNIT 24 MINING AND MINERAL PROCESSING

(A) Description: Extractive operations, certain mineral processing operations and manufacturing operations which directly minerals at or near the source.
(B) Included uses.
(1) Mining and quarrying: Mining, Quarrying Extraction of Coal, Ores, Stone, Sand or Gravel.
(2) Processing of Mineral Products: Such as crushing, washing and grading of coal, ore, stone, sand or gravel Manufacture of Portland cement, concrete or asphalting concrete, at the source of supply of crushed rock, sand or gravel for utilization off the premises.

(C) Use conditions: The Board of Zoning Appeals, in granting a Mining and Mineral Processing use by Special Exception, shall consider potential environmental influences, such as dust and vibration, and shall establish in the particular instance appropriate protective conditions, such as setbacks, screening and method of operation as will mitigate the adverse effects on appropriate land uses.

(D) Off-street parking and loading berths:

Use	Parking Spaces	Loading Berths
All Uses	1 per 2 employees	N/A

See Section 153.180 for required minimum dimensions and design criteria for parking facilities.

153.170 USE UNIT 25 LIGHT MANUFACTURING

(A) Description: Light manufacturing and industrial uses having slight or no objectionable environmental influences by reason of the emission of odor, heat, smoke, noise or vibration. All activities and storage is to be entirely within a completely enclosed building.

(B) Included uses:

(1) Bottling Plant
(2) Fuel Oil Storage and Distribution
(3) Glass Manufacture and Blowing
(4) Laundry (Industrial)
(5) Machine shop
(6) Music instrument manufacture
(7) Plastic Products Manufacture
(8) Porcelain Manufacture
(9) Sheet Metal shop
(10) Other light industrial or manufacturing uses that are fully enclosed in a building excluding the uses first cited in Use Units 26 and 27

(C) Use conditions:

(1) All uses included in Use Unit 25, which are located within three hundred (300) feet of an R or O District, shall be conducted with enclosed buildings.

(2) The uses included in Use Unit 25, when located on a lot which is abutting an R or O District, shall be screened from the abutting R or O District by the erection and maintenance of screening wall or fence along the lot line or lines in common with the R or O District.

(D) Off-street parking and loading requirements:

Use	Parking Spaces	Loading Berths
All Uses	1 per 1,000 sq.ft. of developed site	1 per 2,000-40,000 sq.ft. plus 1 per each 40,000-100,000 sq.ft., plus 1 per each additional 100,000 sq.ft. of floor area

See Section 153.180 for required minimum dimensions and design criteria for parking facilities.

153.171 USE UNIT 26 MEDIUM MANUFACTURING AND INDUSTRY

(A) Description. Manufacturing and industrial uses having moderately objectionable environmental influences by reason of the emission of odor, heat, smoke, noise or vibration. All processes and activities are to be within an enclosed building; while outdoor is permitted, it must be completely screened from the public right-of-way and abutting properties.

(B) Included Uses:

(1) Building contract construction service and storage such as concrete construction services, grain elevators

(2) Heavy Construction Contracting:

(a) Heating Construction Contract services
(b) Masonry Construction Contracting
(c) Oil Well Drilling Cleaning Service and Storage Yard
(d) Painting Contractor and Storage
(e) Roofing Construction Service
(f) Sheet Metal Construction Contractor
(g) Stonework Contracting
(h) Water Well Cleaning and Drilling

(3) Industrial or manufacturing uses which have processes that may be fully enclosed in a building and which have assembly materials and products that may be fully screened from the public right-of-way and abutting properties but excluding uses first cited in Use Unit 27:

(a) Brass manufacture
(b) Copper manufacture
(c) Blast Furnaces as a Minor and Incidental Part of Another Permitted Industrial Use
(d) Cellophane and Celluloid Manufacture
(e) Concrete Manufacture, Ready Mix Plant
(f) Dyestuff Manufacture
(g) Feed Milling and Processing
(h) Garbage Contract Pickup
(i) Gas (heating or illuminating) manufacture or storage
(j) Graphite Manufacture
(k) Ink Manufacture
(l) Lamp Black Manufacture
(m) Meat and Fish Processing
(n) Metal and/or Silver Plating and Polishing
(o) Monument Sales and Shaping
(p) Oilcloth or Linoleum Manufacture
(q) Paper or Pulp Manufacturing by Sulfide Processes Emitting Noxious Gases or Odors
(r) Pickle, Sausage, Sauerkraut or Vinegar Manufacture
(s) Starch, Glucose, Dextrin Manufacture
(t) Textile Manufacture
(u) Trades, Industries, or Uses Having Moderately Objectionable Environmental Influences by Reason of the Emission of Odor, Heat, Smoke, Noise or Vibration
(v) Washing Compound Manufacture
(w) Welding Shop
(x) Wool Scouring, Hair Manufacture
(y) Yeast Manufacture for Wholesale

(C) Use conditions:

(1) The uses included in Use Unit 26, which are located within three hundred (300) feet of an R District, shall be conducted within enclosed buildings.

(2) The uses included in Use Unit 26, when located on a lot which shall be screened from the abutting residential or office district by the erection and maintenance of screening wall or fence along the lot line or lines in common with the R or O District.

(D) Off-street parking and loading requirements.

Use	Parking Spaces	Loading Berths
Airport	1 per each 500 sq.ft. of enclosed passenger terminal area	1 per 2,000-40,000 sq.ft. of floor area, plus 1 per 40,000-100,000 sq.ft., plus 1 per each additional 100,000 sq.ft.

All Other Uses	1 per 1,000 sq.ft. of of developed site	1 per 2,000-40,000 sq.ft. plus 1 per 40,000-100,000 sq.ft. plus 1 per each additional 100,000 sq.ft. of floor area.

See Section 153.180 for required minimum dimensions and design criteria for parking facilities.

153.172 USE UNIT 27 HEAVY MANUFACTURING AND INDUSTRY.

(A) Description: Manufacturing and Industrial Use have substantial objectionable environment influences by reason of the emission of odor, heat, smoke, noise or vibration. Processes, raw materials and completed products materials need not be fully enclosed in a building; however, such must be completely screened from the public right-of-way and abutting properties unless permitted by the Board of Zoning Appeals in the granting of the Special Exception.

(B) Included uses: Those manufacturing or Industrial Uses not elsewhere classified, or allowed may be permitted by Special Exception, and the following uses:

(1) Acetylene Gas Manufacture in Excess of 15 Pounds of Pressure per Square Inch
(2) Acid Manufacture for Wholesale
(3) Aluminum works, foundry and manufacture
(4) Ammonia, Bleaching Powder or Chlorine Manufacture
(5) Asphalt Manufacture or Refining
(6) Auto Salvage Yards
(7) Bio-Fuel and Ethanol Manufacture
(8) Blast Furnaces
(9) Boiler Works or Forage Works
(10) Brick, Tile or Terra Cotta Manufacture
(11) Cement, Lime, Gypsum, Plaster of Paris, Manufacturing;
(12) Chloride or Hydrochloric, Nitric, Picric, Sulfurous, Sulfuric Acid, or Ammonia Manufacture
(13) Coke Manufacture
(14) Creosote Manufacture or Treatment
(15) Dextrin Manufacture
(16) Disinfectant or Insecticide Manufacture
(17) Distillation of Bones, Coal, Tar or Wood
(18) Ethanol Manufacture
(19) Explosive Manufacture and/or Storage
(20) Fat Rendering
(21) Fertilizer Manufacture from Mineral or Organic Materials
(22) Foundry, Metal
(23) Garbage, Offal or Dead Animal Reduction or Dumping Glue,
(24) Gelatin, Glue or Size Manufacture
(25) Glucose Manufacture
(26) Gypsum Manufacture
(27) Incineration or Reduction of Dead Animals, Garbage, Offal or Refuse
(28) Iron or Sheet foundry works
(29) Junk Yard
(30) Lime, Cement, or Plaster of Paris Manufacture Match Manufacture
(31) Metal Foundry
(32) Paint (Oil), Varnish and Turpentine Manufacture
(33) Paper or Pulp Manufacture by Sulfide Process Emitting Noxious Gases or Odors
(34) Petroleum or Other Crude Materials Refining and Tank Farms

(35) Plastic Raw Material, Pounder and Resin Manufacture
(36) Rayon or Cellophane Manufacture
(37) Refuse Dump
(38) Roofing Manufacture
(39) Rolling Mill
(40) Rubber Manufacture from Crude Materials
(41) Salvage Yards, NEC
(42) Sanitary Landfill
(43) Shoddy Manufacture
(44) Slaughter of Animals
(45) Smelting
(46) Soap Manufacture
(47) Soda Ash, Caustic Soda and Washing Compound Manufacture
(48) Soy Bean Refining
(49) Stock Yards
(50) Storage of Dismantled Automobiles or Any Form of Junk
(51) Sugar Refining
(52) Tallow, Grease, Lard Manufacture or Refining
(53) Tanning or Curing of Leather, Raw Hides or Skins or Storage of Raw Hides or Skins
(54) Tar Distillation or Manufacture
(55) Tar Roof or Tar Water Proofing Manufacture
(56) Trades, Industries, or Uses That Have Heavily Objectionable Environmental Influences by Reason of the Emission of Odor, Heat, Smoke, Noise or Vibration.
(57) Turpentine Manufacture
(58) Varnish Manufacture

(C) Use conditions: Use conditions will include those in 153.171(C)(2) for screening. The Board of Zoning Appeals may set other such conditions as they deem necessary.

(D) Off-street parking and loading requirements:

Use	Parking Spaces	Loading Berths
All Uses	1 per 1,000 sq.ft. of developed site	1 per 2,000-40,000 sq.ft. plus 1 per 40,000-100,000 sq.ft. plus 1 per each additional 100,000 sq.ft. of floor area

See Section 153.180 for required minimum dimensions and design criteria for parking facilities.

153.173 USE UNIT 28 HOME OCCUPATIONS

(A) Description: Any occupation or activity conducted within a dwelling unit or accessory building that is clearly incidental and subordinate to the principle use of the premises for dwelling purposes, and the individuals engaged in such occupation or activity reside within the dwelling.

(B) Uses:

(1) Beauty or barber shop, provided the non- residential activity does not occupy more than twenty percent (20%) of the first or ground floor or basement within a residential dwelling unit and provided that the use is limited to one (1) beautician or barber who resides within the dwelling.

(2) Home occupation conducted within a dwelling unit whose main use is residential, and occupying not more than twenty-five percent (25%) of the first floor or ground floor or basement of such dwelling unit or in an accessory building. Non-residential activity shall be conducted by the occupant of the dwelling unit. Such uses as tea rooms, tourist home, veterinary office, hospitals, shall not be deemed as home occupations. There shall be no display or indication on the exterior of the dwelling unit that it is being utilized in part for any non-residential uses. There shall be no commodity sold on the premises, other than

what is produced there. There shall be no person employed other than a member of the family residing on the premises. Name plate not exceeding two (2) square feet in area.

(3) Conditional Use: The Board of Zoning Appeals upon application and public hearing, may grant a Conditional Use Permit for two (2) employees or assistants for any permitted home occupation, within the dwelling or separate structure.

(C) Use Conditions: The Board of Zoning Appeals may set other such conditions as they deem necessary.

(D) Off-street parking and loading requirements: Off-street parking and loading as may be required by the Board of Zoning Appeals in granting the Special Exception use.

153.174 USE UNIT 29 MOBILE OFFICE TRAILER

(A) Description: Mobile Office Trailer

(B) Uses: A vehicle designed to serve whenever parked as a temporary office for a construction project and not for dwelling, living or sleeping quarters**.**

(C) Use Conditions: In zoning districts where the mobile office trailer is a use by right, the setback requirements for accessory structures applicable in the respective zoning district shall be met. In zoning districts where the mobile office trailer is a use by special exception, the setback requirements shall be established at the discretion of Board of Zoning Appeals at the time of the hearing on the special exception.

(D) Off-street parking and loading requirements: None

(as amended Mt.Vernon 5-16-13, Cynthiana 5-14-13, Poseyville 5-8-13, County 5-7-13)

153.180 OFF-STREET PARKING AND OFF-STREET LOADING

153.181 PURPOSE

It is the intent of this section to assure that adequate off-street parking and off-street loading berths are provided with the construction, alteration, remodeling or changes of use of the building or change in the use of land. There are no off-street parking and off-street loading requirements in the Agricultural District or the Central Business District.

153.182 APPLICABILITY OF REQUIREMENTS

The off-street parking and off-street loading facilities (whether they are principal uses or accessory uses, or they are minimum requirement for the initiation, enlargement, or change of use) shall meet the requirements of this chapter as follows:

(A) Effective Date: For all buildings and structures erected and all uses of land established after the effective date of this code, parking and loading facilities shall be provided as required by the applicable Use Unit. (See Sections 153.141 through 153.173.)

(B) Use Expansion: When the intensity of use of any building or structure or lot is altered through the addition of dwelling units, floor area, seating capacity or other units of measurement, and said change results in an increase in the required number of parking or loading berths, the off-street parking and loading facilities shall provide for such increase in intensity of use.

(C) Use Change: Whenever the existing use of a building or structure shall hereafter be changed to a new use, parking and/or loading requirements shall comply with such new use. However, if the building or structure was erected prior to the effective date of this ordinance or the use is non-conforming as to parking and loading requirements then parking and loading requirements for a change in use shall be governed by 153.207 of this chapter, Parking and Loading Non-Conforming Uses.

(D) Accessory Off-Street Parking and Loading Facilities: Accessory off-street parking and loading facilities in existence as of the effective date of this ordinance and located on the same lot as the building or use served shall not hereafter be reduced below, or if already less than, shall not be further reduced below the requirements for a similar new building or use under the provisions of this ordinance.

153.183 GENERAL REQUIREMENTS

(A) Yard Preservation: Off-Street parking and off-street loading facilities shall not occupy required livability space; shall not occupy the required front year, street side yard or side yard (except in the Agricultural, Residential and Office Districts where vehicles may be parked in the required front yard for residential uses); and when a B or C District abuts an O or R District, shall observe the front yard requirements of the O or R District for a distance of 200 feet into the B or C District (except the CBD).

(B) Loading Berth Not for Parking Space: Space allocated to any required off-street loading berth shall not be used to satisfy the space requirements for any off-street parking facilities.

(C) Parking Space Not for Loading Berth: Space allocated to any required off-street parking shall not be used to satisfy the space requirements of any off-street loading facilities.

(D) Loading Berth Not for Other Purposes: Required off-street parking spaces and required off-street loading berths shall not be used for the storage, sales, dismantling, or servicing of any vehicle, equipment, materials, or supplies.

(E) Proximity of Off-Street Parking Spaces and Loading Berths to Land Use Served: Required off-street parking spaces and required off-street loading berths shall be located on the lot containing the use for which the required spaces or berths are to be provided. However, off-street parking spaces on an abutting property may be used to meet the off-street parking requirements provided the parking spacing on any abutting properties are secured through a long-term lease of twenty-five (25) or more years.

(F) Access to Parking Space: The capacity of an off-street parking area shall be the number of parking spaces having required dimensions located thereon. Space design shall be such that each space can be entered without passing through another space.

(G) No Maneuvering on Public Street: Required off-street parking in commercial, office, industrial and multifamily developments other than townhouses, zones shall be so arranged that no maneuvering incidental to parking movements takes place on any public street.

(H) Joint Use Parking Area: The number of off-street parking spaces required for each building or use shall be determined by reference to the appropriate Use Unit 0-28 (Sections 153.141 through 153.173) within which the proposed use is classified. Where several different uses will share a joint parking area, the parking requirements shall be computed based upon the overall development. For any use not listed, or where listed regulations are not applicable in the judgment of the Area Plan Commission Staff, parking requirements shall be determined by Planning Staff. Computations of required parking spaces by Planning Staff shall be final.

(I) Lighting: Lighting used to illuminate off-street parking areas, if any, shall be by constant light and shall be so arranged as to direct the light away from properties within an Residential or Office District which do not contain uses for which the parking is being provided.

(J) Parking Surface: With the exception of the Agricultural District, unenclosed off-street parking areas, off-street loading areas and driveways associated therein shall be surfaced with an all-weather material. (See definition "all-weather material", Section 153.270.) Surfacing shall be completed prior to the initiation of the use.

153.184 DESIGN STANDARD OFF-STREET PARKING AREAS

(A) Dimensions Table: Table 10-1 and Figure 10-1 below detail required dimensions for off-street parking areas. This includes stall width, aisle width and bay width. Dimensions are provided for ninety (90) degree, sixty (60) degree and forty-five (45) degree orientation.

(B) Orientation: The ninety (90) degree angle orientation is preferable. However, in the event sixty (60) degree or forty-five (45) degree angle orientation is employed, the use of interlocking herringbone patterns shall not be permitted.

(C) Pedestrian Movement: To ensure full sidewalk width, for pedestrian movement, a three (3) foot wide overhang area shall be provided when parking area design is such that parked cars are headed in toward sidewalk. A three (3) foot overhang shall also be provided where parking is allowed immediately adjacent to a building. (Note: These requirements do not increase required stall length. However, they do require that a curb line be designated three (3) feet back from the diagram. Bumper guards may also be used for this designation.)

(D) Parking Space Access: Each required parking space shall be accessible via a driveway or parking aisle from a public street without passing through another required space.

(E Screening: Unenclosed off-street parking areas which are principal uses shall be screened by the erection of a screening wall or fence on the lot line or lines in common with a Residential or Office District. Unenclosed off-street parking areas, containing six (6) or more spaces, which are accessory to uses not required to provide screening shall be screened by the erection of a screening wall or fence on the lot line or lines in common with an RS/R-1District. However, if the parking area is located more than fifty (50) feet from the RS/R-1 lot line the screening requirement shall not apply.

153.185 DESIGN STANDARDS FOR OFF-STREET LOADING AREAS

(A) Loading Area: Unless otherwise specified, a required off-street loading area shall be at least ten (10) feet in width, thirty (30) feet in length, exclusive of aisles, and shall have a vertical clearance of at least fourteen (14) feet.

(B) Loading Area Access: Required off-street loading area shall be provided access to and from a public

street or alley by an access drive of at least ten (10) feet in width designed to permit convenient access by semi-trailer trucks.

(C) Load Area Separation: Unenclosed off-street loading areas shall not be located within fifty (50) feet of any abutting property which is within a Residential or Office District unless it is totally within an enclosed building or screened on all sides abutting the Residential or Office District by a screening wall or fence.

(D) Lighting: Lighting used to illuminate an off-street loading area shall be so arranged as to direct the light away from the properties within a Residential or Office District which do not contain uses for which the loading area is being provided.

Degree Orientation	(S) Stall Width (ft.)	(D) Stall Length or Depth (ft.)	(C) Curb Length (ft.)	(A) Aisle Width (ft.)	(W) Bay Width (ft.)
90	9.5	19	9.5	28	66
60	9.5	16.5	11	22	55
45	9.5	13.5	13.4	19	46

TABLE 10-1: REQUIRED PARKING AREA DESIGN DIMENSIONS

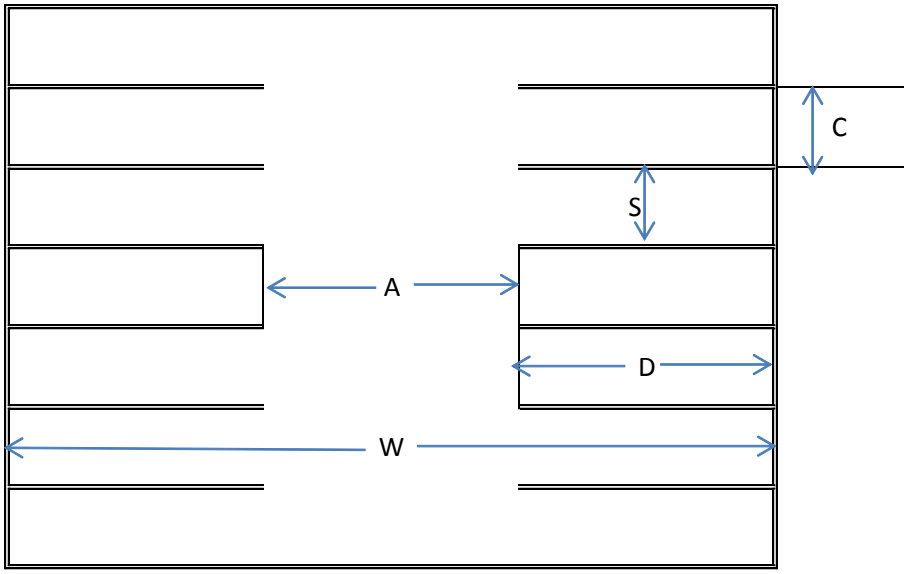

Figure 10-1: Parking Area Dimensions

153.190 Section Reserved for Future Provisions

153.200 NONCONFORMING USES AND STRUCTURES

153.201 GENERAL

Within the districts established by this ordinance there exists uses, structures and lots which were lawful before this ordinance was adopted or amended, but which will be prohibited under the terms of this ordinance or future amendments. These uses, structures and lots, herein referred to as "nonconforming uses" may continue as regulated by this chapter, provided the nature of the nonconformity is not increased.

153.202 NONCONFORMING USES OF UNIMPROVED LAND.

Any nonconforming use of land (such as junk yard, and storage areas) lawfully existing upon the effective date of this ordinance may continue subject to the following provisions:

(A) A nonconforming use may be changed only to a use of the same or more restrictive classification, provided the use is permitted as a use of right and not by Special Exception and does not increase any other nonconforming aspect (building, parking, signing, etc.). (Note: While most uses may be found to be a use of right in some district, there are some uses that are not permitted as a use of right in any district and are permitted only by Special Exception.)

(B) No such nonconforming use shall be enlarged or increased, nor extended to occupy a greater area of land than was occupied at the effective date of this ordinance or amendment thereof.

(C) No such nonconforming use shall be moved in whole or in part to any portion of the lot or parcel other than that occupied by such use at the effective date of this ordinance or amendment thereof.

(D) No additional structure (other than fences) shall be erected in connection with such nonconforming use of land. If any such nonconforming use of land ceases for any reason for a period of more than twelve (12) months (except when government action impedes access to or use of the premises), any subsequent use of such land shall conform in all respects to the regulations of the district in which located.

(E) A nonconforming use of land, if discontinued for twelve (12) consecutive months shall NOT be resumed.

(F) Noncomforming use Variances on unimproved lots are expressly prohibited under IC 36-7-918.3.

153.203 NONCONFORMING USE OF BUILDING OR BUILDINGS AND LAND IN COMBINATION

Upon the effective date of this ordinance or amendment thereto, if there exists a lawful use of a building, or use of a principal building and land, or use of land and accessory structures, and such use would be prohibited by the terms of the ordinance or amendment thereto, such use shall be deemed nonconforming and may continue subject to the following provisions:

(A) No building devoted to a nonconforming use shall be enlarged or extended, except in changing the use of the building to a use permitted in the district in which it is located.

(B) A nonconforming use of a portion of a building may be extended to the remaining portions of the building if such areas were originally arranged, designed and constructed for such use. However, said use shall not be extended to occupy any land outside the building.

(C) A nonconforming use on part of a lot shall not be expanded or extended onto any other portion of such lot.

(D) A nonconforming use of a building or buildings and land in combination, if discontinued for twelve (12) consecutive months shall not thereafter be resumed.

(E) A nonconforming use may be changed only to a use permitted in the same or more restrictive classification provided the use is permitted as a use of right and not by Special Exception and does not

increase any other nonconforming aspect (building, parking, signing, lot, etc.). (Note: While most uses may be found to be a use of right in some district, there are some uses that are not permitted as a use of right in any district and are permitted only by Special Exception.)

(F) Should the structure, containing a nonconforming, use be damaged or destroyed by fire, explosion or any Act of God to the extent of more than fifty (50) percent of its assessed value, the nonconforming use shall not hereafter continue or be resumed.

(G) Noncomforming use Variances in "buildings" or "buildings and lands in combination" are expressly prohibited under IC 36-7-918.3.

153.204 NONCONFORMING SIGNS

(A) Outdoor advertising signs: Outdoor advertising signs lawfully ("lawfully" deleted in Mount Vernon) existing on the effective date of this ordinance but which would be prohibited by its terms shall be subject to the following regulations:

(1) Should the sign be damaged or partially destroyed to the extent of more than fifty (50%) percent of its current replacement cost the sign shall be removed, or made to conform.

(2) If the sign is not used for advertising purposes for a period of twelve (12) consecutive months, the sign shall be deemed abandoned and shall be removed.

(B) Business signs: Business signs lawfully ("lawfully" deleted in Mount Vernon) existing on the effective date of this ordinance, or amendment thereto, but which would be prohibited by its terms shall be subject to the following requirements:

(1) Should the sign be damaged or partially destroyed to the extent of more than fifty (50%) percent of its current replacement cost the sign shall be removed, or made to conform.

(2) If the sign is not used for advertising purposes for a period of twelve (12) consecutive months, the sign shall be deemed abandoned and shall be removed.

(3) Signs with flashing lights lawfully existing on the effective date of this ordinance or amendment thereto, but which would be prohibited by its terms shall be removed, or made to conform to the provisions of Section 153.166 within one (1) year from the effective date of this ordinance. However, promotional business signs shall comply with this ordinance immediately, from and after its effective date.

(C) Record: A record shall be maintained of signs in existence as of September 1, 2012. (effective only in Mount Vernon)

153.205 NONCONFORMING LOTS

In Residential and Office districts, a lot of record of less width and area, may be used for a single-family detached dwelling. However, compliance with the requirement for the side yard, which abuts a public street, shall be followed and in no case shall the other side yard be less than five (5) feet. All other requirements of the district shall be followed.

153.206 NONCONFORMING STRUCTURES

A structure, lawfully existing at the effective date of the adoption or amendment of this ordinance, but which would be prohibited by the terms of this ordinance by reason of restrictions on floor area, density intensity, height, yards, its location on the lot or other requirements concerning the structure, shall be deemed nonconforming; and shall be subject to the following restrictions:

(A) Alteration: No such nonconforming structure may be enlarged or altered in any manner which increases its nonconformity.

(B) Damage: No structure which has been damaged by fire or explosion or any Act of God, to the extent of fifty (50%) percent or more of its assessed valuation, shall be restored, repaired or rebuilt except to conform to the requirement of the district in which it is located.

(C) Relocation: Should such structure be moved, regardless of the distance, it shall thereafter conform to the provisions of the district in which it is to be located.
(D) Maintenance: On any building containing a nonconforming use or any nonconforming structure, ordinary repairs and maintenance may continue, except as otherwise provided in this chapter.

153.207 NONCONFORMING PARKING, LOADING AND SCREENING REQUIREMENT NONCONFORMING USES

A use lawfully existing at the effective date of this ordinance or amendment thereto, but which does not comply with parking, loading or screening requirements, may continue, subject to the following conditions:
(A) No such use may be enlarged or extended unless parking and loading is provided as required for the total use, including the enlargement or extension.
(B) No such use may be enlarged or extended unless screening is provided as required for the use.
(C) No such use may be changed unless parking, loading and screening is provided as required for such use. However, the Board of Zoning Appeals may modify such parking, loading and screening requirements through a Variance.

153.208 NONCONFORMING MOBILE HOME, PARK AND SUBDIVISION

(A) Mobile Home Size. Any mobile home which existed upon the effective date of this ordinance and lies in a district that continues to permit mobile homes by use of right or Special Exception, but does not meet the minimum livable floor area requirement of this ordinance, may continue as a nonconforming structure. However, if the mobile home is replaced, it shall meet the minimum livable floor area of this ordinance; and the existing mobile home shall be removed from the lot.
(B) Mobile Home Use. Any mobile home which existed upon the effective date of this ordinance and lies in a district that no longer permits a mobile home by use of right or Special Exception, may continue as a nonconforming structure. However, if the mobile home is replaced, it shall be of equal size or meet the minimum livable floor area; which ever is greater; and the existing mobile home shall be removed from the lot.
(C) Mobile Home Park or Mobile Home Subdivision. Any Mobile Home Court, Park or Subdivision which existed upon the effective date of this ordinance and which is located in a district which once but no longer permits a Mobile Home Park or Subdivision either as a permitted use or Special Exception use shall be regarded as a nonconforming use and may be continued. However; any change in layout, expansion or extension shall be subject to all provisions of Section 153.052 of this ordinance.

153.209 NONCONFORMING VARIANCE

The Board of Zoning Appeals may authorize, upon request and in specified cases, a Variance from the terms of this chapter. Action is to be determined at a public hearing. At which time the determination will be made that the Variance request is not contrary to the public interest, and where, owing to special conditions, a literal enforcement of the provisions of this section will result in unnecessary hardship, and so that the spirit of this chapter shall be observed and substantial justice done. However, noncomforming use Variances for uses on unimproved lands, buildings, and buildings and lands in combination are expressly prohibited under IC 36-7-918.3.

153.210 ENFORCEMENT AND FEES

153.211 ENFORCEMENT DUTY OF PLAN COMMISSION

It shall be the duty of the Area Plan Commission and/or their designate to enforce this ordinance. If the Area Plan Commission finds that any of the provisions of this ordinance are being violated the Commission shall notify in writing the owner of the property in violation. Such notification shall indicate the nature of the violation and order the action necessary to correct said violation. The Area Plan Commission shall take such action to ensure compliance with or to prevent violation of this ordinance provisions as is authorized by law. All departments, officials and employees of the applicable jurisdiction vested with the duty or authority to issue permits or licenses shall comply with the provisions of this ordinance and shall issue no permit or licenses for any use, purpose, excavation, construction, structure, building or sign in conflict with the provisions of this chapter.

153.212 COMPLAINTS REGARDING VIOLATION

(A) Standing: Any person may file a complaint whenever a violation of this ordinance occurs, or is alleged to have occurred. Such complaint shall be filed in writing with the Area Plan Commission, and shall state fully the causes and basis of the complaint. The Area Plan Commission shall record such complaint properly, immediately investigate (within ten calendar days) and take action thereon as provided by this chapter.

(B) Staff Investigation: After inspection of the complaint, the Area Plan Commission Executive Director may notify the alleged offender/defendant, complainant, Area Plan Commission President and Area Plan Commission Attorney that no violation has been found. Any Area Plan Commission staff action on a zoning complaint may be appealed to the Area Plan Commission.

(C) Notification of Violation: After verification of the violation by the Area Plan Commission Executive Director, the Executive Director shall provided notification of the violation to the offender/defendant with copies to the complainant, Area Plan Commission Board President, and Area Plan Commission Attorney, and all four shall be given at least ten (10) calendar days notice of the public hearing on the complaint before the Area Plan Commission.

153.213 PENALTIES FOR VIOLATION

(A) Penalty: Any person, firm of corporation violating any provision of this ordinance or failing to comply with any of its requirements, including violations of conditions and safeguards established in connection with grants of Variance or Special Exceptions, shall be deemed an ordinance violation and may carry a fine of not less than $25 nor more than $500. Each day that a violation continues shall be deemed a separate offense.

(B) Other Remedies. Nothing herein contained shall prevent the applicable jurisdiction or its authorized officials from taking other action, authorized by law, to remedy the violation.

153.214 ATTORNEYS FEES

Not withstanding anything contained in this Ordinance to the contrary or appearing to be contrary, and in addition and supplementary to other provisions of this Ordinance, if the Area Plan Commission or Board of Appeals, or the City of Mt. Vernon, Town of Cynthiana, Town of Poseyville or Posey County is required to utilize the services of the City, Town or County Attorney or any other attorney in investigating a possible violation of this ordinance or enforcing the provisions of this Ordinance pursuant to any Section, before any board or court (including appeals), and such investigation results in a determination that a violation has occurred or if the Area Plan Commission, the Board of Zoning Appeals or applicable local jurisdiction is

successful in its enforcement of the Ordinance by way of suit, appeal or other appropriate proceeding, the respondent, defendant or party investigated for a violation shall pay the applicable local jurisdiction reasonable attorney fees and all cost related to the investigation of the violation and the enforcement of this Ordinance, unless such attorney fees of cost are specifically waived by the applicable local legislative body.

153.215 COST ON APPEAL

As to any appeal from a decision of the Area Plan Commission or Board of Zoning Appeals, costs may not be allowed against the Area Plan Commission or Board of Zoning Appeals unless it appears to the court that the Board acted with gross negligence or in bad faith in making the decision brought up for review.

153.216 CODE OF ETHICS

(A) The Mayor or any member of the City Council, any member of a town council, Plan Commission, or Board of Zoning Appeals to whom some private benefit, direct or indirect, financial or otherwise, may come as a result of a public action concerning this ordinance, shall not be a participant in that action. The possibility, not the actuality, of a conflict shall govern. The individual experiencing a conflict of interest shall declare his interest, abstain from voting on the matter, and refrain from any deliberations on the matter. The individual shall not discuss the matter with any fellow official for the purpose of influencing a decision thereon.
(B) Further, there shall be no "exparte" (one side only) communication with members of the Board of County Commissioners, Mount Vernon City Council, Cynthiana Town Council or Poseyville Town Council, Area Plan Commission or Board of Zoning Appeals concerning applications or appeals before the Area Plan Commissioner or Board of Zoning Appeals.

153.217 FEES

(A) Filing Fees: Application and petitions filed pursuant to the provisions of this Ordinance shall be accompanied by the appropriate filing fee.
(B) Plan Commission to Establish Fees: Pursuant to statute, the Area Plan Commission shall establish a schedule of reasonable fees to defray the administrative costs connected with:

(1) Processing and hearing administrative appeals and petitions for rezoning, Special Exceptions, special uses, conditional uses, contingent uses and Variances;

(2) Issuing permits; and

(3) Other official action under the Indiana Code's planning and zoning laws.

(C) Fee Schedule Set Annually: The fee schedule shall be established at the first meeting each year of the Area Plan Commission. In the event the fee schedule is not reviewed by the Area Plan Commission at the first meeting of the year, the existing fee schedule shall remain in full force and effect until modified by the Area Plan Commission.
(D) Posting of Fee Schedule: The fee schedule shall be posted in the Area Plan Commission office in an area of public access.

153.220 IMPROVEMENT LOCATION PERMIT, SITE PLAN REVIEW AND AGREEMENTS

153.221 IMPROVEMENT LOCATION PERMIT

(A) Improvement location permit required. It shall be unlawful for any person, firm or corporation to erect, move, add to or structurally alter any building or structure, or to use or change the use of any building or land or to permit the afore mentioned actions, until an Improvement Location Permit has been issued by the Area Plan Commission.

(B) Application for improvement location permit. Application for an Improvement Location Permit shall be made upon forms prescribed by the Area Plan Commission and accompanied by

(1) A site plan showing:

(a) Legal description of the lot and building plans, drawn to scale in black line or blueprint, showing the actual shape and dimension of the lot and;

(b) The location and dimensions of all easements;

(c) The location, setbacks, size and height of any existing buildings or structures (principal or accessory) to be erected or altered;

(d) The existing and intended use of each building or structure and portion of the lot;

(e) The number of dwellings and buildings it intended to accommodate;

(f) And such other information with regard to the lot and neighboring lots as may be necessary to determine and provide for the enforcement of this ordinance.

(2) Except for single-family detached and two-family dwelling units and accessory uses in the Agriculture, Residential and Office Districts related to single-family detached and two-family dwelling units, the site plan must also show the following:

(a) The exact property lines of the property, showing existing street and right-of-way lines.

(b) Adjacent properties on the same and the opposite frontage, indicating entrances and exits to these properties.

(c) The exact location and dimensions of access drives to the property, service drives, existing and proposed curb cuts, and proposed directions of traffic flow on the property and into and out of the public rights-of-way.

(d) The exact location and dimensions of any necessary frontage/service roads, acceleration or deceleration lanes, left-turn lanes into the property, right and/or left-turn storage lanes, and passing blisters.

(e) The exact location, dimensions and type of pavement off-street parking and loading facilities.

(f) The location, dimensions, height, setback and lighting of all business (on-premises) and outdoor advertising/billboard (off-premises) signs.

(g) Any required landscaping and screening include the type of materials and height for all walls, fences, berms and vegetation.

(f) Sexually oriented businesses in Use Unit 15 and animated (moving image) signs in Use Unit 21 are subject to additional requirements.

(3) The name and address of the person seeking approval. The name shall be the owner(s) of record of the property or include an affidavit of designee of power of attorney.

(4) Any other plans or specifications which the Area Plan Commission deems necessary to determine the site plan conforms to the requirements of this zoning ordinance.

(5) Site Plan approval is not required for those structures which are exempt pursuant to 675 IAC 12-6-4, as may be amended. (as amended 1-2-13 Posey County, 1-8-13 Cynthiana, 1-9-13 Poseyville, 1-24-13 Mt. Vernon) Site plans may be approved by the Area Plan Commission Executive Director for residential and nonresidential uses by right in the Agriculture, R-1/RS, RT, R-2 and R-3/RM and O/R-O Districts with eight (8) or less attached dwelling units. The Area Plan Commission Executive Director may approve site plans for residential or

nonresidential uses by right in any zoning district involving the addition of three hundred (300) square feet or less to an existing structure or the erection of a detached structure of five hundred (500) square feet or less, regardless of whether the addition or erection is a principal or accessory structure. Site development plans are required for more than eight (8) attached dwelling units and for uses in the Business/Commercial and Manufacturing Districts, are to be forwarded to the Site Plan Review Committee, and are subject to approval by the Area Plan Commission after a public hearing as set forth in Section 153.223(F). Uses by Special Exception are subject to approval by the Board of Zoning Appeals. The site development plan approval in the Planned Unit Development District or the Residential Mobile Home District is set forth in those districts.

(C) Response to application for improvement location permit:

(1) After an application for an improvement location permit is filed in compliance with the provisions herein and a site plan per Section B is approved by the Area Plan Commission Executive Director or a site development plan per Section 153.223(F) is approved by the Area Plan Commission, the Plan Commission Executive Director shall issue an Improvement Location Permit or shall notify the applicant, in writing, of his/her refusal to issue a permit and setting forth the reasons therefore.

(2) Improvement location permit shall be posted in a prominent and permanent place on the site and protected from destruction.

(D) Fees for improvement location permits. No Improvement Location Permit shall be issued until a fee has been paid in accordance with the schedule of fees.

(E) Time limit - improvement location permit. The permit will be revoked if active work is not commenced within 60 days after date of permit's issue, or if work was started and then stopped for a period of six months.

153.222 CONSTRUCTION AND USE TO BE AS APPROVED IN APPLICATIONS, PLANS AND PERMITS

Improvement Location Permits, Variances or Special Exceptions, issued on the basis of approved plans and applications, authorize only those uses, arrangement and construction as set forth in said plans and applications. No other use, arrangement or construction is allowed. Use, arrangement or construction at deviance with that authorized shall be deemed a violation of this ordinance and punishable as provided by 153.213.

153.223 SITE DEVELOPMENT PLAN APPROVAL FOR MORE THAN EIGHT ATTACHED DWELLING UNITS AND USES IN THE BUSINESS/COMMERCIAL AND MANUFACTURING ZONING DISTRICTS

(A) Purpose: Site Plan approval is not required for those structures which are exempt pursuant to 675 IAC 12-6-4, as may be amended. (as amended 1-2-13 Posey County, 1-8-13 Cynthiana, 1-9-13 Poseyville, 1-24-13 Mt. Vernon) By reason of potential adverse effects on public services or to neighboring land uses, site development plan review and approval is required for all proposed multifamily complexes over eight units and for uses in the Business/Commercial and Manufacturing Districts. This is for the purposes of assuring proper accessibility, circulation, functional relationships of uses, and compatibility with adjoining and nearby development. Accordingly, no building or structure for more than eight (8) attached dwelling units and for uses in the Business/Commercial and Manufacturing Districts shall be erected, altered, or land used, nor shall an Improvement Location Permit be issued therefore, unless a development plan for such building structure and/or use shall have been presented to and approved by the Area Plan Commission. Uses by Special Exception are subject to approval by the Board of Zoning Appeals. The site plan approval in the Planned Unit Development District or the Residential Mobile Home District is set forth in those districts.

(B) Application for Site Development Plan Review:

(1) The development plan(s) specified herein shall be submitted to the Area Plan Commission Office

along with an application for approval of development plan(s). Also due at the time of the submission of the development plan(s), is an application fee as set forth in the fee schedule adopted by the Area Plan Commission.

(2) The property owner(s) of record or an affidavit of designee by power-of-attorney shall be the applicant.

(3) The site development plan review submission deadline is the second Thursday of each month so that the Plan Commission may take action the following month.

(4) A person desiring the approval of a multifamily complex with over eight (8) units or any use in the Business/Commercial and Manufacturing Districts shall submit to the Plan Commission one (1) copy of a preliminary site plan. The preliminary site plan shall be drawn to a scale of not less than one hundred (100) feet to one (1) inch, on a sheet twenty-four (24) by thirty-six (36) inches. An exception may be made when the drawing, at that scale, requires more than two (2) sheets. The site plan may then be drawn at the scale of two hundred (200) feet to one (1) inch and shall contain the following information:

(a) Description:
- (i) Proposed name of the development
- (ii) A legal description showing development location
- (iii) Name and address of property owners
- (iv) Graphics scale, north point, and date

(b) Existing Conditions:
- (i) Boundary line of proposed development indicated by solid heavy line.
- (ii) Location of existing sewers, water mains, culverts, or other underground facilities, indicating pipe sizes and grades, within and adjoining the proposed development.
- (iii) Boundary lines of adjacent land, showing adjoining streets, easements and owner's names.
- (iv) Existing and proposed topography, contour interval not to exceed five (5) feet.
- (v) In the case of a revised site plan, all descriptive lines of the original site plan being vacated shall be shown by dotted lines in their proper position in relation to the arrangement of the plan, the new site plan being clearly shown in solid lines so as to avoid ambiguity and confusion.

(c) Proposed Conditions:
- (i) Proposed vehicular and pedestrian circulation plan including:
  - (A) The width of alleys, driveways, walkways, and easements,
  - (B) Location of off-street parking facilities and their dimensions and pavement surface materials.
  - (C) The location of all ingress and egress points with their corresponding dimensions.
- (ii) Layout and elevations of proposed buildings and structures including:
  - (A) Computation of lot area,
  - (B) Building floor area,
  - (C) Building coverage,
  - (D) Building height
  - (E) Number of dwelling units to be included (if any).
- (iii) Parcels of land to be dedicated or reserved for public use.
- (iv) Building setback line showing dimensions
- (v) Location and size of proposed:
  - (A) Recreational areas.
  - (B) Commercial and service facilities, and any other structures that may be proposed.
  - (C) Buffer areas, screening walls, and landscaping (including the location, height and materials).
  - (D) Street lights.
- (vi) Location of proposed site improvements indicating pipe capacities, sizes and grades, this shall include if warranted:

(A) Sanitary sewers
(B) Water mains
(C) Storm sewers or on-site stormwater retention basin if the stormwater is to be released into a natural drainage way, creek or stream.

(vii) Proposed type, location, height and size, orientation and illuminations of all signs.

(viii) An explanation of the character of the development reporting the nature and intensity of uses in the development.

(ix) Any additional information specified for a site plan in Section 153.221(B).

(x) Additional information as deemed appropriate by the Area Plan Commission staff for determining compliance with this zoning ordinance.

(C) Referral of Site Development Plan for Agency Review and Comment:

(1) Upon the Area Plan Commission Executive Director's receipt of a site development plan, the Executive Director shall send a copy of the site plan for approval or comment to agencies with responsibilities for law enforcement, fire protection, potable water, street/road maintenance, liquid waste processing and disposal, and stormwater drainage. The Area Plan Commission Executive Director shall request acknowledgment of receipt of the plan and comment as to the effect the site development design would have on services from each agency. If a local stormwater drainage ordinance is passed by the affected jurisdiction, such requirements shall also be met. If there would be no impact or effect, it shall be so noted by the agency. Responses by the agencies shall be made to the Area Plan Commission in writing or verbally at the regular meeting of the Site Development Plan Review Committee.

(2) The agencies shall have seven (7) calendar days after the regular Site Development Plan Review Committee to provide supplemental responses or comments.

(3) The agency responses shall be provided to the applicant to take corrective action prior to the Plan Commission public hearing. Prior to the Plan Commission public hearing, the applicant shall provide any changes to the site development plan and any new letters from any agencies that previously expressed concerns.

(D) Site Development Plan Review Committee Membership, Review and Action:

(1) The site plan committee shall meet no later than thirty (30) days from the date of the submission of the application and development plan(s) to review the development plan.

(2) The Site Development Plan Review Committee of the Area Plan Commission shall consist of four (4) members of the Area Plan Commission, the building commissioner of the affected jurisdiction (if any), the director of the affected municipal sanitary and storm sewers or the Posey County Health Department Officer, and the Posey County Surveyor. The Site Development Plan Review Committee shall submit their proposed Findings of Fact and recommendation to the Area Plan Commission.

(3) The Site Development Plan Review Committee shall not approve such development plans unless it finds that such plan conforms to all applicable provisions of the Ordinance, that the safety and convenience of the public are properly provided for, and that adequate protection and separation are provided for contiguous and nearby residential property. The site plan committee may attach to its approval of a development plan any reasonable conditions, limitations, or requirements, which are found necessary in its judgment to effectuate the purpose of this Section and to carry out the spirit and purpose of this Ordinance.

(E) Public Notification of Public Hearing:

(1) Following action by the Site Development Plan Review Committee and at least ten (10) calendar days before the regularly scheduled Plan Commission public hearing, the Plan Commission staff shall ensure legal notice of the public hearing on the site plan application is published in the local newspaper with the widest circulation in the jurisdiction where the subject property is located.

(2) The Plan Commission staff shall provide the applicant with letters of Plan Commission public hearing notification of abutting property owners, and the applicant shall ensure the abutting property owners are notified by certified mail at least ten (10) calendar days before the Plan Commission public hearing. The applicant shall provide verification of the notification of abutting property owners at least two (2) business days prior to the Plan Commission public hearing

(3) The Plan Commission staff shall provide the applicant with a sign advertising subject of the public hearing and the date of the Plan Commission public hearing. At least ten (10) calendar days prior to the Plan Commission public hearing, the applicant shall have the sign posted on the front property line of the subject property so that the sign is visible from the public way.

(F) Public Hearing and Action:

(1) The Area Plan Commission will hold a public hearing on the development plan at its regularly scheduled meeting following action of the Site Development Plan Review Committee as follows:.

(a) Beginning with a description of the site plan and comments received from public agencies or departments reviewing the site plan to determine whether or not the site plan is in order.

(b) Then, the applicant may present the site plan and respond to any concerns raised by public agencies or departments.

(c) Proponents and opponents to the site plan are then given an opportunity to provide public testimony on the site plan.

(d) The applicant has an opportunity to response to any public comment.

(2) In passing upon and approving development plans, the Area Plan Commission shall consider the following:

(a) Compatibility of the development with surrounding land uses.

(b) Availability and coordination of water, sanitary sewers, storm water draining and other utilities.

(c) Management of traffic in a manner that creates conditions favorable to health, safety, convenience, and the harmonious development of the community. This includes but is not limited to consideration that the design and location of the proposed street and highway access points minimize safety hazards and congestion, that the capacity of adjacent streets and highways is sufficient to safely and efficiently accept traffic that will be generated by the new development and that the entrances, streets, and internal traffic circulation facilities in the development plan are compatible with existing and planned streets and adjacent developments.

(d) Building setback lines.

(e) Building coverage.

(f) Building separation.

(g) Vehicle and pedestrian circulation.

(h) Parking.

(i) Landscaping.

(j) Height, scale, materials and style of improvements.

(k) Signage.

(l) Recreation space.

(m) Outdoor lighting.

(n) Conformance with the Zoning Ordinance and the applicable Comprehensive Plan.

(3) Upon review and consideration of the public agency responses to the site plan and public testimony, the Plan Commission may:

(a) Approve the site plan as presented.

(b) Approve the site plan subject to stated specific corrections to which the applicant concurs. The corrected site plan will be submitted for approval by the President and Executive Director.

(c) Deny the site plan stating specific corrections that must be made by the applicant for the Plan Commission to approve the site plan. The applicant may resubmit the site plan with corrections at any time for a new public hearing consistent with the filing deadline and new public notification of the new public hearing.

(4) The Area Plan Commission may impose conditions on the approval of a development plan if the conditions are reasonably necessary to satisfy the development requirements specified in the zoning ordinance for approval of the development plan. In addition the Area Plan Commission may also provide that approval of a development plan is conditioned on the furnishing to the Area Plan Commission of a bond or written assurance that is satisfactory to the Area Plan commission and that guarantees the timely

completion of a proposed public improvement in the proposed development.

(5) The President of the Area Plan Commission shall be responsible for signing the written Findings of Fact adopted by the Area Plan Commission. The decision of the Area Plan Commission shall be final and is appealable to the Court of Record pursuant to Indiana statute.

(6) Upon approval of the site plan by the Plan Commission President and Executive Director, the applicant may then apply for permit to begin construction.

(F) Compliance with the Approved Site Development Plan:

Any building, structure and/or use shall be erected, altered, installed, and maintained in full conformity with the provisions of this Ordinance and with the development plan(s), which have been approved by the Area Plan Commission.

153.224 Land Use and Development Agreements

(A) General: In accordance with IC 36-7-4-1015, as a condition to the adoption of a rezoning proposal (Zoning Map amendment) or the approval of a Variance or Special Exception , the owner of a parcel of real property may be required or allowed to make a commitment the Area Plan Commission or the Area Board of Zoning Appeals, as applicable, concerning the use and development of that parcel.

(B) Provisions: Commitments are subject to the following provisions:

(1) A commitment must be in writing.

(2) Unless the written commitment is modified or terminated in accordance with this subsection, a written commitment is binding on the owner of the parcel and all subsequent owners.

(3) A commitment shall be recorded in the Office of the County Recorder. After a commitment is recorded, it is binding on a subsequent owner or other person who acquires an interest in the parcel. However, a commitment is binding on the owner who makes the commitment even if the commitment is unrecorded. An unrecorded commitment is binding on a subsequent owner or other person acquiring an interest in the parcel only if that subsequent owner or other person has actual notice of the commitment.

(4) A commitment may contain terms providing for its own expiration. A commitment may also contain terms providing that the commitment automatically terminates:

(a) if the zoning district or classification applicable to the parcel is changed;

(b) if the land use to which the commitment relatives is changed; or.

(c) otherwise in accordance with the rules of the Area Plan Commission to which the commitment is made.

(5) Except for a commitment that expires or automatically terminates under subsection (4) above, a commitment may be modified or terminated only by a decision of the Area Board of Zoning Adjustment or the Area Plan Commission, as appropriate, to which the commitment is made. The decision must be made at a public hearing after notice of the public hearing has been provided under Section 153.241 for Variances and Special Exceptions and Section 153.252(C) for Rezoning.

(6) During the time a rezoning proposal (Zoning Text amendment) is being considered by the applicable local legislative body, the owner may make a new commitment to the Area Plan Commission or modify the terms of the commitment that was made when the proposal was being considered by the Area Plan Commission.

(7) No further action of the Area Plan Commission is required for a new commitment made under subdivision (f) to be effective.

(8) If a commitment is modified under subdivision (6):

(a) No further action is required of the Area Plan Commission for the commitment to be effective if the effect of the modification is to make the commitment more stringent; or

(b) The modified commitment must be ratified by the Area Plan Commission if the effect of the modification is to make the commitment less stringent.

(9) Requiring or allowing a commitment to be made does not obligate the Area Plan Commission or applicable local legislative body to adopt, approve, or favorably recommend the proposal or application to

which the commitment relates.

(C) The Area Plan Commission and the Area Board of Zoning Appeals may adopt rules:

(1) Governing the creation, form, recording, effectiveness, modification and termination of commitments; and

(2) Designating which specially affected persons and classes of specially affected persons are entitled to enforce commitments.

(D) Enforcement: An action to enforce a commitment may be brought in the circuit or superior court of the county by:

(1) The Area Plan Commission or the Area Board of Zoning Appeals to which the commitment was made;

(2) Any person who is entitled to enforce the commitment under the rules of the Area Plan Commission in force at the time the commitment was made; or

(3) Any other specially affected person who was designated in the commitment.

(E) Injunctive Relief: A person bringing an action to enforce a commitment may request mandatory or prohibitory injunctive relief through the granting of a temporary restraining order, preliminary injunction, or permanent injunction. If an action to enforce a commitment is successful, the respondent shall bear the costs of the action. A change of venue from the county may not be granted in such an action.

(F) Indefensible Arguments: In an action to enforce a commitment, it is not a defense that:

(1) No consideration was given for the commitment;

(2) The commitment does not benefit any designated parcel of property

(3) The document setting forth the commitment lacks a seal

(4) There is no privity of estate

(5) There is not privity of contract; or

(6) There is no proof of damages.

(G) Conditions Not Considered Commitments: The following types of conditions are not considered commitments and are not subject to subsection (B):

(1) A condition imposed upon primary approval of a plat that must be met before secondary approval of the plat may be granted.

(2) A condition imposed upon the approval of an exception, a use, a Variance, or a development plan that must be met before an improvement location permit may be granted.

(3) A condition imposed upon an approval relative to any other development requirement that must be met before any other secondary approval may be granted or building permit issued.

(4) A condition that was imposed before July 1, 2011, on an approval relative to any development requirement. However, this subdivision applies only if a copy of the condition has been filed and permanently maintained as a public record in the office of the plan commission that imposed the condition.

(H) Other Agreements Not Considered Commitments: Covenants, easements, equitable, servitudes, and other land use restrictions created in accordance with law are not considered commitments, and are not subject to subsection (B).

153.230 Reserved for Future Provisions

153.240 BOARD OF ZONING APPEALS

153.241 ESTABLISHMENT OF THE POSEY COUNTY AREA BOARD OF ZONING APPEALS

It is hereby recognized that the Posey County Area Board of Zoning Appeals shall serve as the Board of Zoning Appeals for the City of Mt. Vernon, Town of Cynthiana, Town of Poseyville and Posey County with the powers and duties set forth in this chapter. The Board of Zoning Appeals shall adopt "rules of procedure" in accordance with the requirements of IC 36-7-4-916.

153.242 POWERS OF THE BOARD

As set forth in IC 36-7-4-900 et al, the Area Board of Zoning Appeals shall have the power to:

(A) Administrative Appeals. Pursuant to IC 36-7-4-918.1, hear and determine appeals from and review any order, requirement, decision or determination made by:

(1) An administrative official, hearing officer, or staff member under this zoning ordinance; or

(2) An administrative board or other body except the Area Plan Commission in relation to enforcement of this zoning ordinance; or

(3) An administrative board or other body except the Area Plan Commission in relation to enforcement of procedures requiring the procurement of an improvement location permit or an occupancy permit.

(B) Variance of Development Standards. Pursuant to IC 36-7-4-918.5, approve or deny, after application, public notice and a public hearing, Variances from the development standards (such as height, bulk and area) of this zoning ordinance.

(1) The Variance granted:

(a) Shall not be contrary to the public health, safety, morals and general welfare of the community and to the use and value of the adjacent area and

(b) Shall be due to special conditions of the subject property such that a literal enforcement of these provisions would result in undue hardship as further defined in Section 153.245(D) below.

(2) The Area Board of Zoning Appeals is expressly prohibited from granting a Variance from a use district or classification under IC 36-7-4-918.3.

(C) Special Exception. Pursuant to IC 36-7-4-918.2, approve or deny, after application, public notice and public hearing, a Special Exception use, for a use which is not permitted by right in a district because of potential adverse effects. However, if the use is controlled as to its relationship to the neighborhood and the general welfare said use may be permitted by the Board of Zoning Appeals, where specifically authorized by this ordinance. Further, the Board of Zoning Appeals may impose reasonable conditions as part of its approval.

(D) Interpretations. Make interpretations of the zoning map (including questions concerning zoning district boundaries) and text.

(E) New Uses. Determine the appropriate use district or Use Unit for uses not elsewhere classified. However, in no instance shall the Board of Zoning Appeals determine, nor the regulations be so interpreted, that a use shall be permitted in a district or Use Unit when such use is specifically listed as first permissible in a less restrictive use district or in another Use Unit.

153.243 PROCEEDINGS OF THE AREA BOARD OF ZONING APPEALS

Meetings shall be held at the call of the Chairman and at such times as the Area Board of Zoning Appeals may determine. The chairman, or in his absence, the acting Chairman, may administer oaths and compel attendance or witnesses. All meeting, deliberations, and voting of the Board shall be open to the public. The Board shall keep minutes of its proceedings, showing the vote of each member upon each question, or if absent or failing to vote, indicating such fact. Additionally, records shall be kept of all findings of fact, examinations and other official actions, all of which shall be immediately filed in the office of the Board and shall be a public record. The notice, filing and substantive requirements of the Board shall be set forth in the following sections concerning the Board's exercise of that particular power.

153.244 NOTICE OF PUBLIC HEARING OF THE AREA BOARD OF ZONING APPEALS

The Board of Zoning Appeals shall give notice and conduct a public hearing before acting on any appeal from a determination of an administrative official, hearing officer, staff member, administrative board or other body (except the Area Plan Commission) or before granting any Special Exception or Variance.

(A) For an administrative appeal: At least ten (10) calendar days prior to the date of the public hearing, notice of the subject, date, time, place shall be placed in the newspaper of general circulation in the geographic of the subject property. There is no requirement to provide public hearing notice to abutting property owners or to post public hearing notice on the subject property in the case of an administrative appeal.

For a "Variance of development standards" or a "Special Exception": Notice shall be given as set forth:

(1) At least ten (10) calendar days before the regularly scheduled Board of Zoning Appeals public hearing, the Plan Commission staff shall ensure legal notice of the public hearing on the "Variance of development standards" or a "Special Exception" is published in the local newspaper with the widest circulation in the jurisdiction where the subject property is located.

(2) The Plan Commission staff shall provide the applicant with letters of Board of Zoning Appeals public hearing notification of abutting property owners; and the applicant shall ensure the abutting property owners are notified by certified mail at least ten (10) calendar days before the Plan Commission public hearing. The applicant shall provide verification of the notification of abutting property owners at least two (2) business days prior to the Plan Commission public hearing.

(3) The Plan Commission staff shall provide the applicant with a sign advertising subject of the public hearing and the date of the Board of Zoning Appeals public hearing. At least ten (10) calendar days prior to the Board of Zoning Appeals public hearing, the applicant shall have the sign posted on the front property line of the subject property so that the sign is visible from the public way.

153.245 VARIANCES

(A) General. The Area Board of Zoning Appeals upon application, after hearing, and subject to the procedural and substantive standards set forth herein, may grant a Variance from the development standards of this ordinance. (Such as bulk height and/or area). Variances for uses on unimproved lands, buildings, and buildings and lands in combination are expressly prohibited under IC 36-7-918.3. A Variance may not cause substantial detriment to the public good, or impair the spirit, purposes and intent of this ordinance or the comprehensive plan. Further, in granting the Variance, Board of Zoning Appeals must also make a finding of fact that the literal enforcement for the ordinance will result in unnecessary hardship by reason of exceptional narrowness, shallowness, shape, topography or other extraordinary or exceptional situation, condition or circumstance peculiar to the particular property.

(B) Application. A request for a Variance shall be initiated by the filing of an application with the Area Board of Zoning Appeals and shall be set for public hearing by its Secretary in accordance with the rules

established by the Board.

(1) The application shall include such information as necessary to evaluate such request and such additional information as the Board of Zoning Appeals may require. The minimum requirements for a site plan in accordance with Section 153.221(B) will be provided; further, the applicant shall define the nature of the Variance being requested and address the criteria for granting a Variance as set forth in Section 153.245(D)(1).

(2) The applicant for a Variance shall be the owner(s) of record or designee with an affidavit of designee by power-of-attorney.

(3) The filing deadline for applications is the second Thursday of the month.

(C) Authorized variations. Variations from the terms of this ordinance shall be granted by the Area Board of Zoning Appeals in accordance with the standards set forth in this chapter and may be granted in the following instances:

(1) To permit any building or structure to exceed the height limitations imposed by the applicable regulations, not to exceed a ten (10%) percent increase, except in the CBD District where the Board of Zoning Appeals may grant through Special Exception any structure height above 75 feet and greater than four (4) stories.

(2) To permit the use of a lot smaller in width or area than the lot width or area required by this ordinance.

(3) To reduce the applicable off-street parking or loading facilities.

(4) To permit the same off-street parking facilities to qualify as a required facility for two or more uses provided the substantial use of such facility by each uses does not take place at approximately the same hours of the same days of the week.

(5) To permit the Variance from the terms set forth in 153.207.

(6) The modification a screening requirement as provided in 153.026.

(7) To permit the Variance from the terms set forth in 153.024 (B) (3) permitted yard obstructions.

(8) The modification of the parking and loading requirements as provided in Section 153.185.

(D) Board of Zoning Appeal action.

(1) After public notification of the public hearing in accordance with 153.243(B), the Board shall hold the public hearing and upon the concurring votes of a majority of the entire membership may approve a Variance. A Variance may be approved only upon a determination in writing that:

(a) The approval will not be injurious to the public health, safety, morals and general welfare the community.

(b) The use and value of the area adjacent to the property included in the Variance will not be affected in a substantially adverse manner.

(c) The need application of the Variance arose from some condition peculiar the property involved.

(d) The strict application of the terms of the Zoning Ordinance will constitute an unnecessary hardship if applied to the property for which the Variance is sought.

(e) The approval does not interfere substantially with the comprehensive plan.

(2) Provided that the Board in granting a Variance may prescribe appropriate conditions and safeguards and may require such evidence and guarantee or bonds as it may deem necessary to enforce compliance with the conditions attached.

(E) Time limitation. A Variance which has not been utilized within one (1) year from date of the Board of Zoning Appeals order granting the Variance shall thereafter be void, provided that the Board of Zoning Appeals has not extended the time for utilization. For the purpose of this provision, utilization shall mean actual use or the issuance of a building permit, when applicable, provided construction is diligently carried to completion. The exception is the event of litigation concerning such Variance. In such case the period of one (1) year shall not begin to run until the complete and final cessation of litigation. The Plan Commission staff is to provide written notice of the pending expiration to the applicant at least thirty (30) days prior to the expiration date. The applicant shall file the request for extension of the Variance order within fifteen (15) days of the next public hearing.

(F) Time Limitation on Re-filing. A new application and/or rehearing of Variance on the same property shall not be permitted in less than one year, whether or not the Variance has been approved or denied.

(G) Application Withdrawal or Amendment. The application for a Variance must be withdrawn before the public hearing is opened to avoid the one year penalty per Section 153.245(F). Any amendment to the original application by the applicant should be stated at the time of the public, and the Board of Zoning Appeals may propose and the applicant may accept any amendments to the application during the public hearing or during deliberations of the Board of Zoning Appeals before the vote on action. It is within the authority of the Board of Zoning Appeals to determine that an amendment is not substantive in nature or reduces the potential adverse impacts on abutting property owners, and the public hearing may be continued to the next public hearing without re-notification of the abutting property owners if the Board of Zoning Appeals so desires. On the other hand, if the Board of Zoning Appeals determines that an amendment is substantive in nature and does have the potential to increase adverse impacts on abutting property owners, the Board of Zoning Appeals may request that the public hearing be continued to the next public meeting and that the applicant re-notify abutting property owners of the new or supplemental hearing date.

(H) Land Use and Development Agreements for Variance. See Section 153.224.

153.246 SPECIAL EXCEPTIONS

(A) General. The Board of Zoning Appeals upon application and after hearing subject to the procedural and substantive standards hereinafter set forth, may grant the following Special Exceptions:

(1) Special Exception uses as designated and regulated within the permitted use provisions of the zoning district.

(2) Special Exception uses as designated with Section 153.110, Flood Hazard Zoning District.

(3) Special Exception use for off-street parking use of property located within a Residential District, when the property is abutting an Office, Commercial, or Industrial District.

(4) Allow satellite antennas which do not meet all of the standards as set forth in Section 153.024(D) (4), of this chapter.

(5) Special Exception to allow a sexually oriented business to establish itself in the city.

(B) Application. A request for a Special Exception shall be initiated by the filing of an application with the Area Board of Zoning Appeals and shall be set for public hearing by its Secretary in accordance with the rules established by the Board.

(1) The application shall include such information as necessary to evaluate such request and such additional information as the Board of Zoning Appeals may require. The minimum requirements for a site plan in accordance with Section 153.221(B) will be provided; further, the applicant shall define the nature of the Special Exception being requested and address the criteria for granting a Special Exception as set forth in Section 153.246(C)(1).

(2) The applicant for a Special Exception shall be the owner(s) of record or designee with an affidavit of designee by power-of-attorney.

(3) The filing deadline for applications is the second Thursday of the month.

(C) Board of Zoning Appeals action.

(1) After public notification of the public hearing in accordance with 153.244(B), the Board of Zoning Appeals shall hold the public hearing on each request. A concurring vote of a majority of the entire membership will approve the Special Exception request. The Special Exception may be granted upon a determination in writing that:

(a) Will be in harmony with the spirit and intent of this ordinance;

(b) Will not be injurious to the neighborhood or otherwise detrimental to the public welfare.

(c) The proposed use at that particular location requested is necessary or desirable to provide a service or a facility which is in the interest of public convenience and will contribute to the general welfare or the neighborhood or community; and

(d) The proposed use will comply with the regulation and condition specified in this ordinance for

such use and with the conditions and safeguards proscribed by the Board in authorization of the use.

(2) The Board in granting the Special Exception may attach conditions and safeguards and may require such evidence and guarantee or bond as it may deem necessary to enforce the compliance with the attached conditions.

(3) A record of pertinent information presented at the public hearing shall be made and maintained by the Board, as part of the permanent record relative to the application.

(4) Board of Zoning Appeals guidelines for consideration of sexually oriented business.

(a) The Special Exception may be granted upon a written determination that:

(i) The provisions of 153.246(C)(1) are met;

(ii) The perimeter of the subject lot is not:

(A) Located within three hundred (300) feet of any Residential or Office District, or that

(B) The perimeter of the subject lot is not located within three hundred (300) feet of the perimeter of a lot which is the location of a –

(1) Church;

(2) Public library or private library opens to the public,

(3) Public park;

(4) Public playground or

(5) Public and/or private school of primary, secondary or higher education.

(D) Time limitation on Special Exception. A Special Exception which has not been utilized within one (1) year from the date or the order granting the exception shall thereafter be void. This provided that the Board has not extended the time for utilization. For the purpose of this provision, utilization shall mean actual use or the issuance of a building permit, when applicable, provided construction is diligently carried to completion. The exception to this provision is the event of litigation concerning such Special Exception. In such cases the period of one (1) year shall not begin to run until the complete and final cessation of litigation. The Plan Commission staff is to provide written notice of the pending expiration to the applicant at least thirty (30) days prior to the expiration date. The applicant shall file the request for extension of the Special Exception order within fifteen (15) days of the public hearing.

(F) Time Limitation on Re-filing. A new application and/or rehearing of a Special Exception on the same property shall not be permitted in less than one year, whether or not the Special Exception has been approved or denied.

(G) Application Withdrawal or Amendment. The application for a Special Exception must be withdrawn before the public hearing is opened to avoid the one year penalty per Section 153.246(F). Any amendment of the original application by the applicant should be stated at the time of the public, and the Board of Zoning Appeals may propose and the applicant may accept any amendments to the application during the public hearing or during deliberations of the Board of Zoning Appeals before the vote on action. It is within the authority of the Board of Zoning Appeals to determine that an amendment is not substantive in nature or reduces the potential adverse impacts on abutting property owners, and the public hearing may be continued to the next public hearing without re-notification of the abutting property owners if the Board of Zoning Appeals so desires. On the other hand, if the Board of Zoning Appeals determines that an amendment is substantive in nature and does have the potential to increase adverse impacts on abutting property owners, the Board of Zoning Appeals may request that the public hearing be continued to the next public meeting and that the applicant re-notify abutting property owners of the new or supplemental hearing date.

(H) Land Use and Development Agreements for Special Exception. See Section 153.224.

(I) Who may use. A Special Exception for a mobile home must be used by the owner of the real estate or by a member of the owner's family. If the mobile home for which the Special Exception is issued remains unoccupied for a continuous period of 12 months or if it is not used as a residence by the owner or by a member of the owner's family for a continuous period of 12 months then the Special Exception is void.

153.247 APPEALS FROM THE ENFORCEMENT OF THE CHAPTER

An appeal may be made to the Board of Zoning Appeals when it is alleged there is an error in any order, requirement or determination made by an Administrative Official, Board Staff member in the enforcement of this ordinance.

(A) Notice of appeal. An appeal shall be taken within ten (10) days from the determination which is the subject of the complaint. This by filing with the Secretary of the Board, a notice of appeal specifying the grounds thereof. The body from the appeal is taken shall, upon receipt of notice, forthwith transmit to the Secretary of the Board, certified copies of all the papers constituting the record of said matter. Upon receipt of the record the Secretary shall set the matter for public hearing.

(B) Board of Zoning Appeals action. After public notice of the public hearing in accordance with Section 153.244(A), the Board shall hold the public hearing. The Board may reverse or affirm, wholly or partly, or may modify the order, requirement decision or determination appealed. Additionally, the Board may make such order, requirement decision or determination as needed. In doing so the Board shall have all the powers of the officer from whom the appeal is taken. The concurring vote of a majority of the entire membership of the Board shall be necessary to reverse any order, requirement, decision or determination.

(C) Stay of proceedings. An appeal stays all proceeding in furtherance of the action appealed from, unless the Enforcing Officer, from whom the appeal is taken, certifies to the Board of Zoning Appeals, after notice of appeal has been filed, that by reason of facts stated in the certificate, a stay would in his opinion cause imminent peril to life or property. In such case, proceeding shall not be stayed other than by a restraining order which may be granted upon consideration and sufficient cause by the County Circuit Court.

153.248 REVIEW BY CERTIORARI OF DECISIONS

(A) Review by Court. Each decision of the Board of Zoning Appeals is subject to review by certiorari. Each person aggrieved by a decision of the Board of Zoning Appeals may present to the Court of Record a verified petition, setting forth that the decision is illegal, in whole or in part and specifying the grounds of illegality.

(B) Time Limit on Filing Petition. The person shall present the petition to the court within thirty (30) days after the entry of that decision of the Board of Zoning Appeals.

153.250 ZONING TEXT AND MAP AMENDMENTS

153.251 GENERAL.

The regulations, restrictions, prohibitions and limitations imposed, and the districts created may from time to time be amended, supplemented, changed modified or repealed by ordinance. Change shall not be made until the Plan Commission, after notice and public hearing, files with the affected local legislative body a report and recommendation on the proposed change.

153.252 ZONING TEXT AND MAP AMENDMENTS

(A) Amendment initiated by Area Plan Commission or participating Local Legislative Body. The Plan Commission upon its own motion may, or at the direction of a participating local legislative body shall, hold a public hearing, giving notice thereof, on a proposed text or map amendment. After holding the public hearing, the Plan Commission shall within ten (10) days transmit its report and recommendation to the affected local legislative body (or bodies).

(B) Amendment initiated by applicant.

(1) Any person, corporation, partnership, association, or combination there of, having a legal or equitable interest in or to real property or an affidavit of designee by power-of-attorney, may file an application for an amendment of the text of the Zoning Ordinance or a change in the zoning classification of such property by amendment of the Zoning Map. An application shall be filed with the Plan Commission, and shall be in such form and content as the Plan Commission may establish. The application shall be accompanied by payment of a fee, in accordance with the schedule of fees established by the Area Plan Commission.

(2) An application shall be filed before the second Thursday of each month in order to be heard at the Area Plan Commission public hearing in the following month.

(C) Public Notice of Area Plan Commission public hearing required.

(1) For an amendment to the Zoning Ordinance text or an amendment to the Zoning Map (changing the zoning classification of the subject property), the Plan Commission staff shall have notice of the public hearing published in the newspaper of general circulation in the jurisdiction of the subject amendment:

(a) The notice shall be published at least ten (10) calendar days prior to the date of the Area Plan Commission public hearing.

(b) The notice shall state:

(i) The date, time and place of the public hearing.

(ii) Who will conduct the public hearing.

(iii) The name of the applicant and the Section of the Zoning Ordinance being proposed for amendment or the address of the subject property being proposed for the change in zoning.

(iv) The present and desired zoning classifications if a Zoning Map amendment.

(v) Other information as may be necessary to provide adequate and timely public notice.

(2) In addition to the publication of the notice of the public hearing, the following additional public notifications are required for a Zoning Map amendment:

(a) Posting of sign; required for map amendment. Upon the filing of an application the applicant, petitioner or their attorney shall procure of the Plan Commission Office a sign which shall be posted in a conspicuous place and visible at all times to all persons passing the property subject to the proposed Zoning Map amendment. The sign shall be posted continuously for at least ten (10) calendar days prior to the date of the public hearing. The notice shall state:

(i) The date, time and place of public hearing; and

(ii). Who will conduct the public hearing; and

(iii)The present and desired zoning classifications; and

(iv)Other information as may be necessary to provide adequate and timely public notice.

(b) Notification of Abutting Property Owners. The Plan Commission staff shall provide the applicant with letters of Area Plan Commission public hearing notification of abutting property owners; and the applicant shall ensure the abutting property owners are notified by certified mail at least ten (10) calendar days before the Plan Commission public hearing. The applicant shall provide verification of the notification of abutting property owners at least two (2) business days prior to the Plan Commission public hearing.

(3) The applicant shall be responsible for all notification and any re-notification costs including the cost of the publication of notice in newspaper, the cost of the sign and it's posting on the subject property, and the cost of the mailing of the notification of abutting property owners.

(4) For a proposed Zoning Text amendment, only the notice of the public hearing in the local newspaper shall be met at least ten (10) calendar days prior to the Area Plan Commission public hearing. If the notification requirement is not met, the public hearing on the subject amendment shall be deferred, and the applicant shall be responsible for the re-notification cost.

(5) For a proposed Zoning Map amendment, all three notification requirements (notice of the public hearing in the local newspaper, posting of the sign on the subject property and notification of abutting property owners) shall be met at least ten (10) calendar days prior to the date of the Area Plan Commission public hearing. If any of the three notification requirements is not fulfilled, the public hearing on the subject amendment shall be deferred, and the applicant shall be responsible for the re-notification cost.

(6) In the event that the abutting property for a Zoning Map amendment is in an adjacent County or State, two tiers of abutting property owners in the adjacent County or State within 1/8-mile of the subject property shall be notified by certified mail at least ten (10) calendar days prior to the date of the public hearing.

(7) An abutting property owner is the owner of property contiguous to the subject property of the proposed Zoning Map amendment, and is the owner(s) of record in the County Recorder's office. In the event the abutting property is a public right-of-way or in public ownership, the next tier of adjacent property in private ownership shall also be notified. In the event the contiguous property is under the same ownership as the subject property of the proposed Zoning Map amendment, the next tier of adjacent property in private ownership other than the applicant shall also be notified.

(D) Time Limitation on Re-filing for Zoning Map Amendment. A new application and/or rehearing of a proposed Zoning Map amendment on the same property shall not be permitted in less than one year, whether or not the amendment has been approved or denied by the affected local legislative body.

(E) Zoning Map Amendment Application Withdrawal or Revision. The application for a Zoning Map amendment must be withdrawn before the public hearing is opened to avoid the one year penalty per Section 153.256(D). Any revision of the original application by the applicant should be stated at the time of the public, and the Area Plan Commission Board may propose and the applicant may accept any revisions to the application during the public hearing or during deliberations of the Area Plan Commission Board before the vote on action. It is within the authority of the Area Plan Commission Board to determine that a revision is not substantive in nature or reduces the potential adverse impacts on abutting property owners, and the public hearing may be continued to the next public hearing without re-notification of the abutting property owners if the Area Plan Commission Board so desires. On the other hand, if the Area Plan Commission Board determines that a revision is substantive in nature and does have the potential to increase adverse impacts on abutting property owners, the Area Plan Commission Board may request that the public hearing be continued to the next public meeting and that the applicant re-notify abutting property owners of the new or supplemental hearing date.

(F) Planning Commission action on zoning text and map amendments.

(1) After notice and public hearing, the Planning Commission shall vote, by a majority vote of the total Area Plan Commission Board membership, to:

(a) Recommend to the applicable local legislative body that the application be approved as submitted or as amended or be approved subject to modification; OR

(b) Recommend to the applicable local legislative body that application be denied; OR

(c) Shall vote to make no recommendation.

(2) If a majority vote of the total Area Plan Commission Board membership is not attained, the application shall be forwarded to the applicable local legislative body without recommendation.

(3) An application recommended for approval, approval subject to modification or unfavorable recommendation shall be transmitted, with the report and recommendation of the Plan Commission, to the applicable local legislative body within ten (10) calendar days from the date of the Area Plan Commission action. In the event that the Area Plan Commission is unable to take action due to the lack of a majority vote of the total membership, the application shall be transmitted without recommendation to the applicable local legislative body with ten (10) calendar days of the public hearing.

(G) Land Use and Development Agreements. See Section 153.224.

(H) Local Legislative Body action on zoning text and map amendments. The local legislative body shall hold a hearing on each application transmitted from the Area Plan Commission and on any proposed Zoning Text or Map amendment. The local legislative body shall approve the application as submitted, or as amended, or approve the application subject to modification, or deny the application. This is to take place 90 days from transmittal from Plan Commission. A vote of at least a majority of all the elected members of the applicable local legislative body is needed for action on a Zoning Text or Map amendment.

(I) Further consideration of denied request. Upon the denial, by the local legislative body, of an application for a Zoning Text or Map amendment, said application may be resubmitted to the Area Planning Commission one year to date after its initial denial for reconsideration.

153.260 Reserved for Future Provisions

153.270 DEFINITIONS

ABUTTING. In the context of a screening or enclosure requirement, abutting shall mean continuous or separated there from only by a non-arterial street. In other instances, abutting shall mean contiguous.

ACCESSORY USE OR STRUCTURE. A use or structure on the same lot with, and of a nature customarily incidental and subordinate to, the principal use or structure. Any accessory structure must be separated a minimum of ten (10) feet from the principal structure to be considered and accessory structure.

AGRIBUSINESS. Agribusiness means facilities directed at meeting the needs of those engaged in local farming, such as the warehousing, sales, repair, and service of agricultural equipment, vehicles, feed or supplies. It also means facilities such as grain elevators and agricultural product processing plants as well as the wholesaling of agricultural products and livestock sales.

ALL-WEATHER MATERIAL. In the context of unenclosed off-street parking and loading areas this shall be defined as an area improved with a compacted macadam base with surface treatment (seal coat), or asphaltic concrete surface, concrete, or some comparable all weather material.

ALLEY. A permanent public way providing a secondary means of access for service and emergency vehicles and not intended for general traffic circulation.

AREA PLAN COMMISSION. also referred to as Plan Commission.

ARTERIAL. A street designated on the Thoroughfare Plan as a primary arterial or secondary arterial.

BUILDING. A structure which is permanently affixed to the land and has one or more floors, a roof and is bounded by either another building with a common party wall, open air or the lot lines of a lot.

BUILDING HEIGHT. The vertical distance measured from the average ground elevation at the building wall to the highest horizontal point of the structure, provided that height exceptions listed under Section 153.207 shall apply.

BUILDING SETBACK. The horizontal distance, from the point of measurement, such as the centerline of an abutting street or the boundary line of an abutting zoning district to the nearest building wall.

BUSINESS SIGN: A business sign advertises activities on the site. A business sign is also known as an on-premises sign. A business sign attached to the façade of a building or awning is termed a “façade” or “flat” sign (See Attachment C: Zoning Sign Standards.). A business sign attached to the ground is termed a “ground” sign (See Attachment C: Zoning Sign Standards.). A “ground” sign may be on a pole (i.e., pole sign) or may be touching the ground (i.e., monument sign). An outdoor advertising sign, billboard or off-premises sign is not a “business” sign. Bulletin, identification, real estate and construction signs appropriate to Agriculture, Residential and Office zoning districts are not “business” signs.

CAMP TRAILER. See Travel Trailer

CATTLE. Cattle shall include, but not be limited to, cows (whether milked or dry), veal, calves, heifers,

steers, bulls, and cow/calf pairs.

CBD. See Central Business District

CENTRAL BUSINESS DISTRICT. This district designation defined the central business district of Mt. Vernon and is delineated as: The Ohio River to the South, Fifth Street to the North, College Avenue to the West, and Walnut Street to the East. This District is that area of Mt. Vernon characterized by a retail core and intensive office employment. This designation shall be applied to one continuous and contiguous area. The CBD allows the most intense use of land, without regard to the regulation of building height, floor area, land coverage or parking space requirements.

CERTIORARI. A writ from a circuit court to call up for review the records of an inferior court or body acting in a quasi-judicial capacity. i.e. Board of Zoning Appeals.

CHILD CARE, IN HOME. Dwelling unit used to house and provide supervision and care for four (4) or less children, other than those children residing in the dwelling, on a daily basis. Five (5) to ten (10) children may be cared for in the home if the resident obtains a Special Exception and maintains continuous State Licensing.

CHILDREN'S NURSERY. Facility other than a dwelling unit used to provide supervision and care for children on a daily basis.

CHURCH. An edifice for public worship.

COMMERCIAL VEHICLE. A vehicle used in a commercial enterprise and not intended as private passenger vehicle.

CONCENTRATED OR CONFINED FEEDING. Concentrated or Confined Feeding means the raising of animals for food, fur or recreation in lots, pens, ponds, sheds or buildings, where they are confined, fed and maintained for at least 45 days during any year, and where there is no ground cover or vegetation present over at least half of the animals' confinement area. Livestock markets and sale barns are excluded. There are three thresholds:

(1) Animal Feeding Operation (AFO) means a lot or facility where 50 or more cattle, 100 or more hogs, sheep or goats, or 5000 or more fowl have been, are, or will be stabled or confined and fed or maintained for a total of 45 days or more in any 12-month period, and crops, vegetation forage growth, or postharvest residues are not sustained in the normal growing season over any portion of the lot or facility. Animal feeding operation includes animal confinement buildings and animal waste storage facilities. Two or more animal feeding operations under common ownership are considered, for the purposes of these regulations, to be a single animal feeding operation if they adjoin each other. Livestock markets and sale barns are excluded.

(2) Concentrated Feeding Operation (CFO) means any animal feeding operation (AFO) that has at least 300 cattle, 600 swine, sheep or goats, or 30,000 fowl or any operation that is included within the definition in IC 13-11-2 or the definition in Section 502(14) of the federal Clean Water Act. Two or more concentrated animal feeding operations under common ownership are considered, for purposes of these regulations, to be a single concentrated feeding operation if they adjoin each other. Livestock markets and sale barns are excluded.

(3) Confined Animal Feeding Operation (CAFO) shall mean a livestock operation where livestock have been, are, or will be confined and concentrated for thirty (30) or more days in any twelve (12) month period, and such operation consists of at least 700 mature cows (whether milked or dry), 1,000 veal calves; 1,000 cattle other than mature dairy cows or veal calves; 2,500 swine (each weighing 55 pounds

or more); 10,000 swine (each weighing less than 55 pounds); 500 horses; 10,000 sheep, lambs or goats; 55,000 turkeys; 30,000 laying hens or broilers (if the operation uses a liquid manure handling system); 125,000 chickens, other than laying hens (if the operation uses anything other than a liquid manure handling system); 82,000 laying hens; 30,000 ducks, or 5,000 ducks (if the operation uses a liquid manure handling system). Adjoining operations under common ownership are considered to be one animal feeding operation if they use common areas, buildings, equipment or manure handling systems.

CONVENIENCE STORE. Store so located near a residential or office district offering a limited line of household convenience items.

CURB LEVEL. The mean level of the established curb at the frontage of a lot. Where no curb has been established, the city engineer shall establish such curb level or its equivalent for the purposes of this ordinance.

DAY CARE. See Children's Nursery or Child Care.

DETENTION/CORRECTIONAL FACILITY. A facility for the detention, confinement, treatment and/or rehabilitation or persons arrested or convicted for the violation of civil or criminal law. Such facilities include an adult detention center, juvenile delinquency center, pre-release center, correctional community treatment center, jail and prison.

DEVELOPMENT. Any man-made change to improved or unimproved real estate, including but not limited to, buildings or other structures, mining, dredging, filling, grading, paving, excavation or drilling operations. (See "Development" in Section 153.112 when in the context of flood hazard areas.)

DISPLAY SURFACE. The surface of a sign upon, against, or through which the message is displayed or illustrated.

DISPLAY SURFACE AREA. The net geometric area enclosed by the display surface of the sign including the outer extremities of all letters, figures, characters and delineations, but excluding structural supports of free-standing signs when the structural supports are not arranged to become a part of the attention attracting aspects of the sign. For wall or canopy signs, the net geometric area enclosed includes the outer extremities of all letters, figures, characters and delineations, with or without an illuminated background.

DOMESTIC ANIMALS. Animals normally part of home life such as dogs, cats and other small animals that are commonly sold in pet stores.

DUPLEX. A single-family attached dwelling that shares the same structure with another dwelling on the same lot. However, the lot may be split in the subdivision process so that each dwelling has its own lot.

DWELLING. A building or structure used in whole or in part for human inhabitation.

DWELLING, DUPLEX. Building containing two dwelling units, designed for occupancy by not more than two families.

DWELLING, MOBILE HOME. A vehicle designed to serve whenever parked as a dwelling, or as a place of business as manufactured, and containing a minimum of six-hundred-fifty (650) square feet of living area and designed to be used year-round.

DWELLING, MULTIFAMILY. A building containing three or more dwelling units.

DWELLING, SINGLE FAMILY ATTACHED. A building (other than a mobile home) containing one dwelling unit designed for occupancy by not more than one family, containing a minimum of six-hundred-fifty (650) square feet of living area, designed to be used year-round, and having one or two walls in common with other dwelling units. This type of dwelling unit includes duplexes, zero lot-line homes, patio homes, townhouse, row houses and quadruplexes.

DWELLING, SINGLE-FAMILY DETACHED. A building (other than a mobile home) containing one dwelling unit designed for occupancy by not more than one family, and containing a minimum of nine-hundred-fifty (950) square feet of living area, designed to be used year-round, and separated by ten (10) feet from any other dwelling unit..

DWELLING UNIT. A room or group of rooms arranged, intended or designed as a habitable unit, containing kitchen, bath and sleeping facilities, for not more than one family living independently of any other family.

ELDERLY/RETIREMENT HOUSING. A residential complex containing multifamily dwelling designed for and principally occupied by senior citizens. Such facilities may include a congregate meals program in a common dining area, but exclude institutional care such as medical or nursing care and are distinguished from retirement centers and extended-care facilities.

EXTENDED CARE FACILITY. A facility for extended medical care for the purposes of physical rehabilitation.

EMERGENCY AND PROTECTIVE SHELTER. A residential facility which provides room and board for a temporary period [thirty (30) days or less] of protection, counseling and pre-placement screening for abused, displaced or transient children or adults.

FAÇADE SIGN. See Business Sign.

FARM-BASED BUSINESS. Farm-based Business means business customarily associated with the agriculture practice in Posey County.

FARM WORKER. Farm Worker means a person other than the owner of the farm, who for pay performs labor either seasonally or year round in the production, planting, cultivation or harvesting of farm products or the care of livestock.

FARM WORKER HOUSING. Farm Worker Housing means housing constructed in compliance with applicable building and health codes that is occupied seasonally only by farm workers employed on the farm where the housing is located.

FENCE. Fence means an upright, freestanding structure made of wood, masonry, vinyl, metal or similar material and designed to enclose, screen, or separate areas. Fences may not be made from trash, inoperable or junk vehicles, barrels, or any other material not designed to be used as fencing.

FIRM FLOOD INSURANCE. See Section 153.112 for definition.

FLAT SIGN. See Business Sign.

FLOOD. See Section 153.112 for definition.

FLOOD HAZARD AREA. See Section 153.112 for definition.

FLOOD PROTECTION GRADE. See Section 153.112 for definition.

FLOOR AREA. The sum of the gross horizontal areas of the several floors, including the basements, of a building measured from the exterior faces of the exterior walls or from the centering of walls separating two (2) buildings. Provided that for the purpose of determining compliance with the permitted floor area ratio, the floor area of enclosed off-street parking areas shall not be included.

FLOOR AREA RATIO. The floor area of a building or buildings on a lot divided by the lot area.

FOUNDATION, PERMANENT. Any structural system for transporting loads from a structure to the earth at a depth below the established frost line without exceeding the safe bearing capacity of supporting soils.

FRONT YARD. The horizontal distance from the front lot line to the nearest building wall.

FRONTAGE. The lineal measurement of a lot boundary which abuts a public street or the lineal measurement of the building setback line when the boundary of the lot abuts a curved no arterial or cul-de-sac.

GROUND SIGN. A "ground" sign is a stand alone sign not attached to any building façade, canopy or roof. The ground sign may be on a pole (i.e., pole sign) or may be touching the ground (i.e., monument sign).

GROUP HOME. A facility that provided room and board, personal care and habitation services for mentally retarded and/or physically limited persons with a resident staff. Personal care and habitation services excludes on-site institutional type educational training, medical or nursing care.

HABITABLE FLOOR. Any floor usable for living purposes, which includes working, sleeping, eating, cooking or recreation or a combination thereof. A floor used for storage purposes only is not a HABITABLE FLOOR.

HEIGHT, BUILDING. The vertical distance measured from the average ground elevation at the building wall to the highest horizontal point of the structure.

HEIGHT, SIGN. The vertical distance measured from the curb level to the highest point of the sign.

HOME OCCUPATION. Any occupation or activity conducted within a dwelling unit or accessory building which is clearly incidental and subordinate to the use of the premises for dwelling purposes.

IMPROVEMENT LOCATION PERMIT. A permit which must be applied for and received before any structure may be occupied, or use commenced certifying that the structure and or the proposed use comply with the provisions of this ordinance.

KENNEL. The use of land or buildings for the purpose of selling, breeding, boarding or training cats, dogs or both.

LIBRARY. A public building which contains books and other literary materials for reading, study or reference.

LIVABLE FLOOR AREA. The portion of the dwelling unit used as living space and specifically excluding space used for the storage of vehicles (e.g., garage) or for the permanent storage of goods and materials (e.g., storage shed).

LIVABILITY SPACE. The open spaces of a lot which is not allocated to or used for off-street parking or loading areas or for paved access to the off-street or loading area.

LIVESTOCK. Livestock means animals other than customary domestic pets commonly associated with agriculture. These include but are not limited to chickens, cows, cattle, sheep, ducks, goats, hogs, horses, mules, llamas, ostriches, and poultry.

LIVESTOCK FACILITIES. Livestock Facilities shall include all permanent or temporary buildings (or containment structures) used for housing and handling livestock, manure storage structures, feed storage, processing and mortalities.

LIVESTOCK PASTURING OPERATION. Livestock Pasturing Operation means any livestock operation that uses pasture, as defined under this ordinance, as the primary source of feed for the animals.

LOADING BERTH, OFF-STREET. A space of at least ten (10) feet in width and thirty (30) feet in length and having a vertical clearance of at least fourteen (14) feet, designed and located on a lot for the temporary parking of commercial vehicles while loading or unloading merchandise or materials.

LODGE. See private club.

LOT. A lot of record.

LOT AREA. The total horizontal area within the lot lines of a lot.

LOT COVERAGE. Defined as that area of the lot covered by structures. When determining lot coverage, only those structures which are enclosed space are to be considered. An enclosed space must have a roof and walls. Structures such as swimming pools, sidewalks, parking areas, fences, signs and walls are not included in the calculation of lot coverage because they are not enclosed space and are open to the sky. An unenclosed porch is not included in lot coverage; however, a screened-in porch would be considered enclosed space.

LOT LINE. Any boundary of a lot.

LOT LINE, FRONT. The boundary of a lot which abuts a public street. Where the lot abuts more than one street, the shorter of the two (2) lot lines shall be designated, front.

LOT LINE, REAR. The boundary of a lot which is most distant from and most nearly parallel to the front lot line.

LOT LINE, SIDE. Any boundary of lot which is not a front lot line or a rear lot line.

LOT OF RECORD. A lot which is part of a subdivision, the plat of which has been recorded as defined below or a parcel of land defined by meets and bounds and recorded in the office of the Recorder of Deeds of Posey County, Indiana.

LOT WIDTH. The average horizontal distance between the side lot lines.

MANUFACTURED HOME. A dwelling constructed in an offsite manufacturing facility for installation at the building site and having a minimum width of twenty-three (23) feet. This to be placed on a completely enclosed permanent foundation. Dwelling to bear a seal, certifying that it is built in compliance with the Federal Manufactured Housing Construction and Safety Standards Code or Indiana Public Law 360, Acts of 1971, as promulgated by the Indiana Administrative Building Council and constructed after January 1981. Also termed Modular Home.

MANURE. Manure shall mean fecal material and urine from livestock, as well as animal-housing wash water, bedding material, rainwater or snow melt that comes in contact with fecal material or urine. Further liquid manure shall mean; manure handled as a liquid or slurry.

MOBILE HOME. See Dwelling Mobile Home.

MOBILE OFFICE TRAILER. A vehicle designed to serve whenever parked as a temporary office for a construction project and not for dwelling, living, or sleeping quarters. (as amended Mt.Vernon 5-16-13, Cynthiana 5-14-13, Poseyville 5-8-13, County 5-7-13)

MODULAR HOME. See Manufactured Home.

NA. Not applicable.

NAMEPLATE. A sign, attached flush against a building identifying the name of the building or the name of an occupant thereof.

NATURAL RESOURCES. The Indiana Natural Resources Commission or the Indiana Department of Natural Resources.

NEC. Not elsewhere classified.

NPDES PERMIT. An NPDES permit means a National Pollutant Discharge Elimination System permit.

NURSING HOME. A residential health care facility licensed and regulated by the State of Indiana which provides lodging, personal care and supervision for aged, chronically ill, physically infirm or convalescent patients.

OBSTRUCTION. Any dam, wall, wharf, embankment, levee, dike, pile, abutment, projection, excavation, channel rectification, bridge, conduit, culvert, building, wire fence, rock, gravel, refuse, fill, structure or matter in, along, across or projecting into any channel, watercourse or regulatory flood hazard area which may impede, retard, or change the direction or the flow of water, either in itself or by catching or collecting debris carried by such water, or that is placed where the flow of water might carry the same downstream to the damage of life or property.

OPERATOR. Operator shall mean an individual or group of individuals, a partnership, a corporation, a joint venture, or any other entity owning or controlling one or more animal feeding operations or animal wintering operations.

OUTDOOR ADVERTISNG SIGN. A sign advertising products not being sold on the property where the sign is located. This sign is also known as a “billboard” or “off-premises” sign.

OWNER. A person owning, of record, a fee simple interest in real estate or the contract purchaser of real estate provided the contract is duly recorded.

OWNER'S FAMILY. Owner's spouse, children, step-children, grandchildren, parents and/or step-parents of owner or owner's spouse, grandparents and/or step-grandparents of owner or owner's spouse and a spouse of any of the above.

PARK. A tract of land set apart, by the local legislative body, for benefit of the public. The tract may be used for passive recreation (such as picnicking) or for active recreation (such as children's playground, sports field or ball court).

PARKING SPACE, OFF-STREET. A space on a lot intended and reserved for the parking of an automobile. Such space is to be of at least nine (9) feet in width by twenty (20) feet in length. This shall be combined with a driveway connecting the space with a street or alley and permitting ingress or egress of an automobile.

PASTURE. Pasture means an area where crops, vegetative forage growth, or post-harvest residues are sustained for the purpose of grazing animals in that area.

PASTURING. Pasturing means a livestock operation in which animals graze in a pasture.

PATIO HOME. A single-family attached dwelling of one story (in contrast to a townhouse that has at least two stories) on an individual lot that shares at least one side wall with another dwelling unit and that has a back patio (but not necessarily a backyard). Patio home structures contain two to four units instead of a continuous row of houses common with townhouses. Yard requirements are observed for the structure (building) rather than individual dwellings.

PLAN COMMISSION. The Posey County Area Plan Commission.

PLANNED UNIT DEVELOPMENT. A discretionary type of development for a tract of land under single ownership or control, based upon an approved development plan permitting flexibility of principal land use, lot sizes and accessory uses not otherwise available under conventional development standards.

PLAYGROUND. See Park.

PRIVATE CLUB OR LODGE FACILITY. Where the chief activity is a service and is not operated as a business for profit and which holds and maintains an income tax exempt status.

PUD. See Planned Unit Development

QUADRUPLEX. A single-family attached dwelling unit located on an individual lot that has two common walls with other units, and four dwelling units in each structure. All dwelling units are on the same level and no dwelling units are constructed above or below the other. Yard requirements are observed for the structure (building) rather than individual dwellings.

ROADSIDE STAND. Roadside Stand means a structure or portion thereof for the shelter, display and sale of agricultural products produced on the premises with no space for customers within the structure itself.

RECREATION VEHICLE. A vehicular structure portable or self propelled designed as a temporary

dwelling for travel use or recreational use not exceeding thirty-five (35) feet in length.

REGULATORY FLOOD PROFILE 100 YEAR. A longitudinal profile along the tread of a stream showing the maximum water surface attained by the regulatory flood.

RESIDENTIAL STORAGE STRUCTURE A structure used for personal storage purposes only and which storage does not involve the conduct of any business, trade, occupation or profession. This does not include mobile home dwellings. As amended Posey County 9-23-14, Poseyville 10-9-14, Cynthiana Mt. Vernon

RESIDENTIAL TREATMENT CENTER. A community-based residential facility providing diagnostic or therapeutic services and long-term room and board in a highly structured environment for its residents for alcoholism and drug abuse, mental illness or behavioral disorders.

RETIREMENT CENTER. A residential facility containing a dwelling designed for and principally occupied by Senior Citizens in a planned retirement community which includes a residential complex, an activity or community center, and a medical or nursing facility which is licensed by the State of Indiana as an Intermediate Care Facility or a Skilled Nursing Center.

RIVER OR STREAM. All open channels (whether natural or modified) which carry or discharge water.

ROOMING AND BOARDING HOUSE. A facility wherein congregate meals and lodging are provided for its residents exclusive of a supervised living or residential care facility as elsewhere defined, and exclusive of a hotel or motel.

SETBACK. A horizontal distance determining the location of a building with respect to the property line, a street, use district boundary line, or another use. Where the term "Setback" is used in conjunction with a modifying word or words such a "Parking Area", the setback shall in its application include, but not be limited to, buildings.

SEXUALLY ORIENTED BUSINESS.

(1) Defined by this chapter are:

(a) ADULT AMUSEMENT or ENTERTAINMENT. Amusement or Entertainment which is distinguished or characterized by an emphasis on acts or material depicting, describing or relating to Sexual Conduct or Specified Anatomical Areas, as defined herein, including but not limited to topless, exotic dancers, strippers, male, or female or similar entertainment.

(b) ADULT BOOKSTORE. An establishment having as a significant portion of its stock in trade books, film, magazines and other periodicals which are distinguished or characterized by an emphasis on depicting or describing Sexual Conduct or Specified Anatomical Areas.

(c) ADULT MOTION PICTURE ARCADE. Any place to which the public is permitted or invited wherein coin or slug-operated or electronically or mechanically controlled, still or motion picture machines, projectors, or other image-producing devices are maintained to show images to five (5) or fewer persons per machine at any one (1) time, and where the images so displayed are distinguished or characterized by an emphasis on depicting or describing Sexual Conduct or Specified Anatomical Areas.

(d) MASSAGE PARLOR. Any place where for any form of consideration or gratuity massage, alcohol rub, administration or fomentations, electric or magnetic treatments, or any other treatment or manipulation of the human body occurs, without medical purpose, as part of or in connection with Sexual conduct or where any person providing such treatment, manipulation or service related thereto exposes specified Anatomical Areas.

(2) SEXUAL CONDUCT. Includes the following:

(a) The fondling or other touching of human genitals, pubic region, buttocks, or female breast;

(b) Ultimate sex acts, normal or perverted, actual or simulated, including intercourse, oral copulation, sodomy;

(c) Masturbation; and,

(d) Excretory functions as part of or in connection with any of the activities set forth in one through three above.

(3) SPECIFIED ANATOMICAL AREAS. Includes the following:

(a) Human genitals, pubic region, buttocks, and female breasts below a point immediately above the top of the areola.

(b) Human male genitals in a discernible turgid state, even if completely and opaquely covered.

SHOOTING RANGE. A permanently located and improved area designed and operated for the use of rifles, shotguns, pistols, silhouettes, skeet, trap, black powder and other similar sport shooting in an indoor or outdoor environment. The area may be publicly or privately owned and operated for profit or not for profit. "Shooting range" does not include any area for the exclusive use of archery or air guns.

SIGNS, BUSINESS. A sign which directs attention to a business, commodity, service, or entertainment conducted on the premises.

SIGN, CANOPY. A sign wholly supported by a canopy projecting from a building or an extended roof or pitched roof and which does not extend above the mean height level of the building.

SIGN, CONSTRUCTION. A temporary sign erected during the period of construction advertising the construction of improvements on the property.

SIGN, HEIGHT. The vertical distance measured from the curb level to the highest point of the sign.
Sign, (Off-Premises) – A sign, including a billboard, which directs attention to a business, commodity, service, or entertainment not exclusively related to the premises where such sign is located or to which it is affixed.

SIGN, OFF PREMISES. See "Sign, Outdoor Advertising".

SIGN, ON PREMISES. Same as a "business" sign. A sign which directs attention to a business, building, product, activity, or service, manufactured, sold, or offered upon the premised as the primary use(s) where such sign is located.

SIGN, OUTDOOR ADVERTISING. A sign which directs attention to a business, commodity, service or entertainment, sold or offered elsewhere than the premises and only incidentally on the premises if at all. This is also known as a "billboard" or "off-premises" sign.

SIGN, PORTABLE. A sign which is not permanently affixed to the ground or a building.

SIGN, PROJECTING. A sign affixed to a building and which extends horizontally more than twelve (12) feet from the supporting portion of the building.

SIGN, PROMOTIONAL BUSINESS. Items such as tinsel, advertising flags, searchlights, balloons and banners.

SIGN, REAL ESTATE. A temporary sign advertising the sale, rental or lease of the premises.

SIGN, ROOF. A sign other than a promotional business sign which is affixed to a roof extended roof, pitched roof, or canopy and which extends above the building wall or parapet wall.

SIGN, WALL. A sign affixed to a building wall or parapet which does not extend horizontally more than fifteen (15) inches from the wall no extend above the height of the wall or parapet.

SPECIAL EXCEPTION. A use or a design element of a use which is not permitted by right in a particular district because of potential adverse effect, but which if controlled in the particular instance as to its relationship to the neighborhood and of the general welfare, may be permitted by the Board of Zoning Appeals, where specifically authorized by the ordinance, and in accordance with the substantive and procedural standards of the ordinance.

STABLE. Stable means a building in which domestic animals are sheltered and fed.

STORY. A room or set of rooms on one (1) floor level of a building.

STREET. Any named or numbered street along its= full length, irrespective of any intervening street.

STREET SIDE YARD. When a lot abuts two streets, the yard on the secondary street is termed the "street side yard".

STREET WALL. The wall or part of the building nearest to the street line.

STRUCTURE. Anything constructed or erected with a fixed location on the ground, or attached to something having a fixed location on the ground, and includes buildings, walks, fences and signs. Provided that, for the purposes of Section 153.110, Floodway District "structure" means a walled and roofed building that is principally above ground, as well as a mobile home. Provided that, for the calculation of Lot Area Coverage, "structure" means an enclosed space with a roof and walls.

SUPPLEMENTAL DISTRICT. A zoning district to be mapped as an overlay to a use district and which modifies or supplements the regulations of the general district in recognition of distinguishing circumstances such as unit development or flooding propensity while maintaining the character and purposes of the general use district area over which it is superimposed.

SUPPORT SYSTEM (FOUNDATION). A combination of footings, piers, caps, plates, and shims, which, when properly installed, support the manufactured modular home; footings being the part of the support system which transmit loads to the soil as or below the surface and frost line; piers and caps being the part of the support system between the footing and the home, exclusive of plates and shims; plates and shims being the cushion of wood or other approved material, which are used to fill the gap between the top of the pier caps and the frame of the home.

SWIMMING POOLS. Swimming pools shall include, but not necessarily limited to, pools over three (3) feet in depth at any point, and shall exclude lakes.

TOP PLATE. The horizontal timber directly carrying the trusses of a roof or the rafters.

TOWN
TOWNHOUSE DEVELOPMENT. A row of at least three (3) attached dwelling units each separated by a party wall on individual lots and designed for separate ownership of the individual dwelling units with no separate dwelling unit constructed above another dwelling unit; provided that in a development of six (6) or more units, a row of two (2) attached dwelling units may be constructed thereon.

TRANSITIONAL LIVING CENTER. A community-based residential facility that provides short-term (one hundred twenty (120) days or less) room and board in a supervised living environment utilizing counseling and rehabilitation services for persons with a history of juvenile delinquency, behavioral disorders, mental illness, alcoholism or drug abuse.

TRAVEL TRAILER. See Recreation Vehicle

VARIANCE. A relaxation of restriction of the Zoning Code, granted by the Board of Zoning Appeals, where by reason of exceptional narrowness, shallowness, shape, topography, or other extraordinary or exceptional situation, condition or circumstance of the ordinance, restriction, would result in unnecessary hardship.

VETERINARIAN CLINIC. A building used exclusively for the care and treatment of animals, including incidental overnight boarding of animals within the enclosed building, but excluding outside animal runs or boarding services.

YARD. A open unoccupied space on a lot between a building and a lot line.

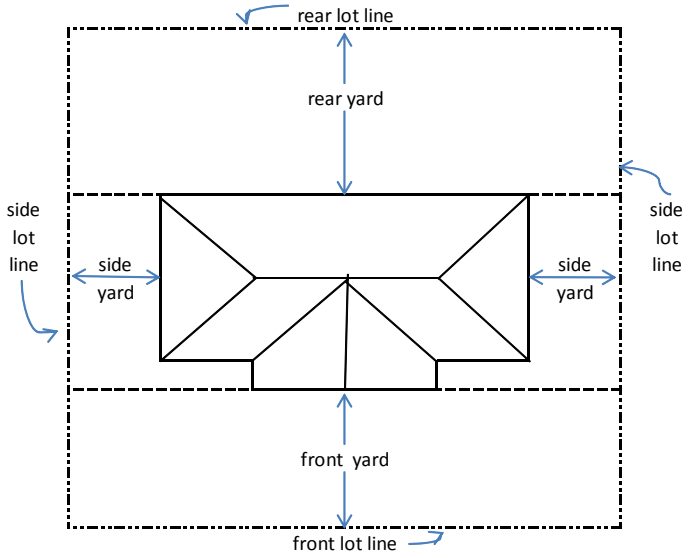

YARDS

YARD, FRONT. A yard extending along the full length of the front lot lines between the side lot lines.

YARD, REAR. A yard extending along the full length of the rear lot line between the side lot lines.

YARD, REQUIRED. The minimum permitted distance of open unoccupied space between a building and a lot line.

YARD, SIDE. A yard extending along a side lot line between the front yard and the rear yard.

YARD, STREET SIDE. A yard fronting on the secondary street abutting lot.

ZERO LOT-LINE HOME. A single-family attached dwelling unit on an individual lot that shares a single common wall with another dwelling unit or that is structurally attached to another dwelling, and that has only one side year. Only two dwelling units may be attached in the structure.

ZONING DISTRICT. A zone designating permitted uses by right and special exception, with associated bulk and area standards.

ZONING MAP, OFFICIAL. The officially adopted map by the applicable local legislative body that shows the geographic location of zoning district designations in conjunction with the text of the zoning ordinance.

ZONING TEXT. The narrative portion of the zoning ordinance.

APPENDIX A: USE UNIT BY ZONING DISTRICT
(X = use by Right, E = use by Special Exception)

Use Unit	**A**	**RS or R-1**	**RT**	**R-2**	**RM or R-3**	**RMH**	**PUD**	**R-O or O**	**B-1**	**B-1A or CS**	**B-2 or CG**	**B-3 or CH**	**CBD**	**M-1**	**M-2**
0 Active Agriculture[1]	X														
1 Areawide Uses by Right	X	X	X	X	X	X	X	X	X	X	X	X	X	X	X
2 Areawide Special Exception Uses	E	E[w+]	E	E	E	E[w+]	E[w+]	E[w+]	E[w+]	E[w+]	E[w+]	E[w+]	E[w+]	E[w+]	E[w+]
3 Public Protection & Utility Facilities	E	E	E	E	E	E	E	E	E	X	X	X	X	X	X
4 Community Services[2]	E[ab]	E[ab]	E[b]	E[b]	E[b]	E[ab]	E[ab]	E[b]	E[b]	X	X	X	X	E[a]	
5 Single-Family Detached Dwelling	X[m]	X	X	X	X		X	X	X	X	X	X	E		
6 Single-Family Attached Dwelling[3]			X	X	X		X	X	X	X	X	X	X		
7 Multiple Family Dwelling[4]					X		X	X[n]	X	X	X	X	X		
8 Manufactured or Modular Dwelling	X	X	X	X	X	E	X	X		X	X	X	X		
9 Mobile Home Dwelling	E					X									
10 Off-Street Parking Areas					E			X	E	X	X	X	X	X	X
11 Offices and Studios					E		X	X	X	X	X	X	X	X	X
12 Entertainment & Eating Establishments (w/o Drive-In)							X	X[f]		X[f]	X	X	X	E	E
13 Convenience Goods & Services							X	E	X[o]	X	X	X	X	E	E
14 Shopping Goods & Services							X	E	X[o]	X	X	X	X	E	E
15 Other Trades & Services	E[i]								X[o]		X	X	E	X	X
16 Gasoline Service Stations									E	X	X	X	E	X	X
17 Automotive & Allied Activities											X	X	E	X	X
18 Drive-In Restaurants											X	X	E	E	E
19 Hotel, Motel & Recreation Facilities											X	X	X	E	E
20 Commercial Recreation: Intensive	E											E*	E	E	E*
21 Business Signs & Outdoor Advertising	E[v]						X[v]		X[v]	X[v]	X	X	E[v]	X	X
22 Research & Development												E		X	X
23 Warehousing & Wholesaling	E[k]											X	E	X	X
24 Mining & Mineral Processing	E														E
25 Light Manufacturing												E		X	X
26 Medium Manufacturing & Industry															X
27 Heavy Manufacturing & Industry	E[l]														E
28 Home Occupations	E	E	E	E	E	E	E	X	X	X	X	X	X		
29 Mobile Office Trailer	X/E^	E^	E^	E^	E^	E^	E^	E^	X/E^	X/E^	X/E^	X/E^	X/E^	X/E^	X/E^

Notes:

*(as amended 10/16/02 Posey County, 11/01/12 Mt. Vernon, 11/13/12 Cynthiana, 11/14.2012 Poseyville)

^as amended Mt.Vernon 5-16-13, Cynthiana 5-14-13, Poseyville 5-8-13, County 5-7-13)

+as amendend Posey County 9-23-14, Poseyville 10-8-14, Cynthiana 10-14-14, Mt. Vernon 10-16-14

1) Allow roadside stands for agricultural and other products in Agricultural, Commercial and Industrial districts, but prohibit in Residential districts. Allow yard sales in all districts not to exceed 3 consecutive days per month. Permit confined feeding in Agricultural district beyond 2 miles of incorporated areas.
2) This Use Unit includes churches, nonprofit educational and philanthropic institutions and colleges.
3) This Use Unit to be expanded to include other single-family attached dwelling unit types.
4) This Use Unit includes "group quarters" uses, but excludes funeral homes, hotels and motels.

a) Excluding protective shelters, residential treatment centers, transitional living centers
b) Mt. Vernon allows day care in home with 4 or less by right in residential

d) Nursing home, group home, convent, monastery, and novitiate permitted by right; other Use Unit 7 uses by Special Exception
e) Only if located in whole or part in the RMH District
f) Excluding entertainment and drinking establishments
g) Excluding drug store (only pharmacy permitted) and supermarket (only food special shop)
h) Only book store, dairy store, food specialty shop, gift store, grocery (not supermarket), health food store, liquor store, newsstand, shoe repair shop, tailor shop and tobacco store permitted in Use Unit 14
i) Limited to veterinary office, animal hospital or kennel (including outside runs); greenhouses
k) Limited to wholesale greenhouses and growers
l) Limited to livestock sales and auctions + commercial breeding; landfills prohibited
m) Accessory living quarters clearly complementary to the principal use and not for rental purposes. Not permitted in other districts.
n) County allows single-family, two-family and multi-family uses by right. Both Mt. Vernon and County require Special Exception for "group quarters" uses. Special Exception required for "group quarters" uses.
o) Restrictive list of uses in Use Units 13 and 14.
v) Outdoor advertising (off-premises) signs are prohibited.
w) Excludes Use Unit 2(B)(14)

APPENDIX B: ZONING BULK and AREA STANDARDS (page 1)

Bulk and Area Requirements	**A**	RS or **R-1**	RT	**R-2**	RM or R-3	RMH	PUD	**R-O** or O
Tract Width (minimum feet)						100		
Lot Width (minimum feet)[a]						56		
one family (single-family detached)	150	70	70	70	70			70
two family (single-family attached)[b]			70	70	70		-	70
multiple family					100/			100
non-residential/Special Exception	150	100	100		100			70[z]
Minimum Tract Area (acres)	1.0[c]					5	10	
Lot Area (minimum square feet)						6440		7000[l]
one family (single-family detached)	1.0[c]	7000[l]	7000[l]	7000[l]	7000[l]			7000[l]
two family (single-family attached)			7000[l]	7000[l]	7000[l]			7000[l]
multiple family					10000[l]			10000[l]
non-residential/Special Exception	1.0[c]	10000[l]	10000[l]	10000[l]	10000[l]	10000		7000[l]
Structure Height								
maximum feet	35[k]	35/35	35	35	50	35		35
maximum number of stories	2.5	2.5	2.5	2.5	4	1		2.5
Yard								
front yard (ft.)	25[u]	25[u] ft	25[u]	25[u]	25[u]	20		25[u]
street side year (ft.)	25[v]	25[v].	25[v]	25[v]	25[v]	10		25[v]
side yard (ft.)	15[j]	5	5	5	5	5		5
rear yard (ft.)	25 [j]	25	20	25	20	10		20
Perimeter (ft.)	10[g]	10[g]	10[g]	10[g]	10[g]	25		10[g]
Lot Coverage	30%	30%	30%	30%	50%	30%		50%
Floor Area Ratio		0.4	0.5	0.5	0.5		0.5	0.5
Lot Area per Dwelling Unit (sq.ft.)					1500			1500
Density (dwelling unit/acre)		6.223	12.446	12.446	29.04		6-29[y]	6-29[y]
Livability space/du ft.)						300		
Minimum floor area per du (sq. ft.)								
mobile home	650					650		
single-family	950	950		950	950		950	950
two family			650	650	650		650	650
multiple family					400-700[x]		400-700[x]	400-700[x]
Minimum residential structure width (feet)	23[w]	23	20	23	23		20	23

Notes:

a) at the building line

b) A minimum of three townhouses per structure with 70-foot width and minimum lot width of 20 feet.

c) Larger tract or lot area may be required by the Posey County Health Department for liquid waste disposal.

d) Limited to one-story within 50 feet of an adjoining district.

g) When a nonresidential structure by right or Special Exception in the Agricultural District or O-R District abuts an R District or when a nonresidential structure by right or Special Exception is established in the RS/R-1, RT, R-2,

RM/R-3 or R-O/O District, the minimum side yard requirement (and minimum rear yard requirement in the A District) of 10 feet is increased by one foot for each foot of building height exceeding 18 feet , but the resulting side yard (and rear yard for the A District) should not exceed a maximum of 25 feet. When the O or R-0 District abuts an R District, the side yard requirement is at least 10 feet. When the O or R-O District abuts a single-family district, the 10-foot side yard is increased 1-foot for each foot of building height exceeding 18 feet and the rear year of 20 feet is increased 1-foot for each foot of building height exceeding 28 feet.

h) When a B or C District (except CBD) abuts an R-3, RM, O or R-O District, the side yard requirement is 20 feet, but may be reduced to 10 feet if landscaped. When a B or C District (except the CBD) abuts an R-1, RS, RT or R-2 District, the minimum side and rear yard requirement is 20 feet and is to be increased one additional foot for each foot of building height exceeding 28 feet and cannot be reduced by landscaping.

i) When a nonresidential structure by right or Special Exception in an Agricultural District abuts another property in the Agricultural District, the side yard and rear yard setbacks are reduced to a minimum of 10 feet , and may be reduced to 5 feet upon receipt of notarized signature of abutting property owners within 1000 feet not objecting to the reduced side and/or rear yard.

j) 10-foot minimum side and rear yard setback for non-residential uses

k) 45 feet height for non-residential uses

l) One-acre if no public sewers.

p) Overall densities of RS, RT and RM apply to the area developed for the particular dwelling unit type.

r) When a B or C District abuts an O or R District, the front yard requirements of the O or R District should be observed for 200 feet into the B or C District (except the CBD). When a B or C District abuts an O or R District, off-street parking is prohibited in the front and street side yards; however, off-street parking would be permitted in front and street side yards greater than 10 feet provided the side yards are landscaped to hide the parking area and the parking area does not extend into the first 10 feet of the front or street side yard. The front yard and street side yard requirements of the B and C District may be reduced to none if adjacent lots or the majority of the lots on the blockface have no front yard or street side yard setback.

s) The front yard and street side yard requirements of the M District may be reduced to none if adjacent lots or the majority of the lots on the blockface have no front yard or street side yard setback.

t) When a M District abuts a R or O District, the side yard and rear yard requirement is increased to 20 feet, is further increased an additional foot for each additional foot of building height exceeding 28 feet, and cannot be reduced by landscaping. A fence is required between industrial lots, and an opaque feet and evergreen screen is required in the side and rear yard adjacent to non-industrial zones. Further, when a M District abuts a R or O District, a combination of opaque fence, evergreen screen and earthen berm is required.

u) The front yard set back may be more or less than the 25-foot minimum depending on the predominant front yard setback of existing structures along the blockface. If only one lot on the blockface is developed, the front yard setback for the new structure should be the average of the 25-foot setback and the existing structure. When the proposed structure falls between two developed lots, the front yard setback should be the average of the two abutting structures.

v) The street side yard requirement may be more or less if the predominant front yard setback along the blockface of the side street is more or less.

w) The minimum structure width does not apply to a mobile home in the Agricultural District.

x) The minimum livable floor area is 400 sq. ft. for an efficiency, 500 sq. ft. for one-bedroom, 600 sq. ft. for two-bedroom and 700 sq. ft. for three-bedroom.

y) The maximum average density of a subarea for a particular housing type corresponds to the maximum density of the traditional residential zoning district containing that housing type (i.e., single-family detached = 6.223 du/ac, single-family attached = 12.446 du/ac, multiple family = 29.04 du/ac).

z) In the case of a townhouse row or retail/office structure with several stores/offices, the minimum lot width for a townhouse/store/office may be 20 feet with no side yard requirement provided the structure or retail/office building observes the minimum tract width and side yard requirements.

APPENDIX B: ZONING BULK and AREA STANDARDS (page 2)

Bulk and Area Requirements	B-1	B-1A or CS	B-2 or CG	B-3 or CH	CBD	M-1	M-2
Tract Width (minimum feet)		100[z]	100[z]	100[z]			
Lot Width (minimum feet)[a]						150[z]	200[z]
one family (single-family detached)	70	100	100	100			
two family (single-family attached)[b]	70[z]	100	100	100			
multiple family	100	100	100	100			
non-residential/Special Exception	100[z]	100[z]	100[z]	100[z]			
Minimum Tract Area (acres)							
Lot Area (minimum square feet)	none		none				
one family (single-family detached)	7000	10000	10000	10000			
two family (single-family attached)	7000	10000	10000	10000			
multiple family	10000	10000	10000	10000			
non-residential/Special Exception	10000	10000	10000	10000			
Structure Height							
maximum feet	35	50	75	75	75	none	none
maximum number of stories	2.56	4	4	4	4	none	none
Yard							
front yard (ft.)	10[r]	10[r]	10[r]	10[r]	none	25[s]	25[s]
street side year (ft.)	10[r]	10[r]	10[r]	10[r]	none	25[s]	25[s]
side yard (ft.)	10	10	/ 10	10/	none	10[t]	10[t]
rear yard (ft.)	20	20	20	20	none	20[t]	20[t]
Perimeter (ft.)	10[h]	10[h]	10[h]	10[h]	none		
Lot Coverage					100%	65%	65%
Floor Area Ratio	0.5	0.5	0.75	1.0	6.0	N/A	N/A
Lot Area per Dwelling (sq. ft.)	1500	1500	1500	1500	1500		
Density (dwelling unit/acre)	6-29[y]	6-29[y]	6-29[y]	6-29[y]	6-29[y]		
Livability space/du ft.)							
Minimum floor area per du (sq. ft.)							
single-family	950	950	950	950	950		
two family	650	650	650	650	650		
multiple family	400-700[x]	400-700[x]	400-700[x]	400-700[x]	400-700[x]		
Minimum structure width (feet)	20	20	20	20	20	20	20

Notes:
a) at the building line
b) A minimum of three townhouses per structure with 70-foot width and minimum lot width of 20 feet.
Larger tract or lot area may be required by the Posey County Health Department for liquid waste disposal.
d) Limited to one-story within 50 feet of an adjoining district.
e) Special Exception uses.
f) 50 feet from expressway or primary thoroughfare.
g) When a nonresidential structure by right or Special Exception in the Agricultural District or O-R District abuts an R District or when a nonresidential structure by right or Special Exception is established in the RS/R-1, RT, R-2, RM/R-3 or O-R/O District, the minimum side yard requirement (and minimum rear yard requirement in the A District) of 10 feet is increased by one foot for each foot of building height exceeding 18 feet , but the resulting side yard (and rear yard for the A District) should not exceed a maximum of 25 feet. When the O or R-0 District abuts an

R District, the side yard requirement is at least 10 feet. When the O or R-O District abuts a single-family district, the 10-foot side yard is increased 1-foot for each foot of building height exceeding 18 feet and the rear year of 20 feet is increased 1-foot for each foot of building height exceeding 28 feet.

h) When a B or C District (except CBD) abuts an R-3, RM, O or R-O District, the side yard requirement is 20 feet, but may be reduced to 10 feet if landscaped. When a B or C District (except the CBD) abuts an R-1, RS, RT or R-2 District, the minimum side and rear yard requirement is 20 feet and is to be increased one additional foot for each foot of building height exceeding 28 feet and cannot be reduced by landscaping.

i). When a nonresidential structure by right or Special Exception in an Agricultural District abuts another property in the Agricultural District, the side yard and rear yard setbacks are reduced to a minimum of 10 feet , and may be reduced to 5 feet upon receipt of notarized signature of abutting property owners within 1000 feet not objecting to the reduced side and/or rear yard.

j) 10-foot minimum side and rear yard setback for non-residential uses

k) 45 feet height for non-residential uses

l) One-acre if no public sewers.

p) Overall densities of RS, RT and RM apply to the area developed for the particular dwelling unit type.

r) When a B or C District abuts an O or R District, the front yard requirements of the O or R District should be observed for 200 feet into the B or C District (except the CBD). When a B or C District abuts an O or R District, off-street parking is prohibited in the front and street side yards; however, off-street parking would be permitted in front and street side yards greater than 10 feet provided the side yards are landscaped to hide the parking area and the parking area does not extend into the first 10 feet of the front or street side yard. The front yard and street side yard requirements of the B and C District may be reduced to none if adjacent lots or the majority of the lots on the blockface have no front yard or street side yard setback.

s) The front yard and street side yard requirements of the M District may be reduced to none if adjacent lots or the majority of the lots on the blockface have no front yard or street side yard setback.

t) When a M District abuts a R or O District, the side yard and rear yard requirement is increased to 20 feet, is further increased an additional foot for each additional foot of building height exceeding 28 feet, and cannot be reduced by landscaping. A fence is required between industrial lots, and an opaque feet and evergreen screen is required in the side and rear yard adjacent to non-industrial zones. Further, when a M District abuts a R or O District, a combination of opaque fence, evergreen screen and earthen berm is required.

u) The front yard set back may be more or less than the 25-foot minimum depending on the predominant front yard setback of existing structures along the blockface. If only one lot on the blockface is developed, the front yard setback for the new structure should be the average of the 25-foot setback and the existing structure. When the proposed structure falls between two developed lots, the front yard setback should be the average of the two abutting structures.

v) The street side yard requirement may be more or less if the predominant front yard setback along the blockface of the side street is more or less.

x) The minimum livable floor area is 400 sq. ft. for an efficiency, 500 sq. ft. for one-bedroom, 600 sq. ft. for two-bedroom and 700 sq. ft. for three-bedroom.

y) The maximum average density of a subarea for a particular housing type corresponds to the maximum density of the traditional residential zoning district containing that housing type (i.e., single-family detached = 6.223 du/ac, single-family attached = 12.446 du/ac, multiple family = 29.04 du/ac).

z) In the case of a townhouse row or retail/office/industrial structure with several stores/offices/warehouses, the minimum lot width for a townhouse/store/office/industrial may be 20 feet with no side yard requirement provided the structure or retail/office/industrial building observes the minimum tract width and side yard requirements.

APPENDIX C: ZONING SIGN STANDARDS (page 1)

Sign Standards	A	RS , RT, RM R-1, R-2, R-3	RMH RMH	PUD	O R-O
On Premises Signs					
type	B = bulletin R = real estate	I = identification (a) C = construction			
# per street frontage	one	One	One at entry	one	one
spacing (ft.)	N/A	N/A	N/A	N/A	N/A
setback (ft.)	1-foot. from property line	1-foot. from property line	1-foot. from property line	1-foot. from property line	1-foot. from property line
Maximum height (ft.)	B = 15 I = 12 R = 6 C = 15	B = 15 I =12 R = 6 in RS/R-1 and RT/R-2 R = 15 in RM/R-3 C = 15	B = 15 I = 12 R = 6 C = 15	B = 15 I = 12 R = 15 C = 15	B = 15 I =12 R = 15 C = 15
Maximum sides	2	2	2	2	2
total area per face (sq. ft.)	B = 12 I = 48 R = 4 C = 40	B =12 I = 48 R = 4 in RS/R-1 and RT/R-2 R = 8 in RM/R-3 C = 40	B =12 I = 48 R = 12 C = 40	B =12 I = 48 R = 8 C = 40	B =12 I = 48 R = 8 C = 40
illumination	constant	constant	constant	constant	constant

Notes:
a) An identification sign displays the name of a multi-family development, mobile home park, single-family subdivision or permitted non-residential use.
b) A “flat” sign includes wall, façade or canopy signs.
c) A “ground” sign includes signs on poles or posts as well as “monument” signs without elevating poles or posts.

APPENDIX C: ZONING SIGN STANDARDS (page 2)

Sign Standards	**B-1**	**CS B-1A**	**CG B-2**	**CBD**	**CH B-3**	**M-1**	**M-2**
On Premises Signs							
type	*flat (b) *ground (c)						
# per street frontage	1	1	**1**	1	1	1	
spacing (ft.)	One per 100’	One per 100’	One per 100’	N/A	One per 100’	One per 150’	One per 200’
setback (ft.)	1-foot. from property line, not within 30-foot radius of another flat or ground sign, not with 50-foot radius of an R district						
Maximum height (ft.)	flat = 6’ above canopy ground = 25’	flat = 6’ above canopy ground = 30’	flat = 6’ above canopy ground = 35	flat = 6’ above canopy ground = 35’	flat = 6’ above canopy ground = 50’		
Maximum sides	2	2	**2**	2	2	2	2
total area per face (sq. ft.)	flat = 3 sq. ft. per linear foot of building; all other signs = 2 sq. ft. per linear foot of street frontage ; maximum of 200 sq. ft. flat or other	flat = 3 sq. ft. per linear foot of building; other signs = 2 sq. ft. per linear foot of street frontage; maximum of 300 sq. ft. flat or other	flat = 3 sq. ft. per linear foot of building all other sign = 3 sq. ft. per linear foot of street frontage; maximum of 500 sq. ft. flat or other	flat = 3 sq. ft. per linear foot of building; other signs = 3 sq. ft. per linear foot of street frontage; maximum of 150 sq. ft. flat or other	flat = 3 sq. ft. per linear foot of building; other signs = 3 sq. ft. per linear foot of street frontage; maximum of 700 sq. ft. flat or other		
illumination	constant, flashing or electronic message	constant, flashing or electronic message	constant, flashing or electronic message	constant, flashing or electronic message	constant, flashing or electronic message		

Notes:
a) An identification sign displays the name of a multi-family development, mobile home park, single-family subdivision or permitted non-residential use.
b) A “flat” sign includes wall, façade or canopy signs.
c) A “ground” sign includes signs on poles or posts as well as “monument” signs without elevating poles or posts.

APPENDIX D: USES REFERENCED TO USE UNIT

LAND USE	USE UNIT
(A)	
Abstract Company	11
Accounting Services…….	11
Acetylene Gas Manufacturing	27
Acid Manufacturing	27
Adult Amusement Center	15
Adult Bookstore	15
Adult Detention Center	2
Advertising Agency	11
Advertising Signs	21
Agriculture Implement Sales	17
Agricultural Products…….	0
Air Conditioning Service	15
Aircraft Sales	17
Airport	2
Aluminum Works/Foundry/Manufacture	27
Ambulance Service	3
Ammonia Manufacturing	27
Amusement Activities, NEC	20
Animal Feeding Operations…….	0
Animal Rendering & Slaughter	27
Antique Shop	14
Apartment Hotel	7
Apartments	7
Appliance Repair	15
Appliance Store	14
Aquarium	4
Arboretum	1
Arcade	15
Architectural Services…….	11
Area-Wide Use by Exception	2
Area-Wide Use by Right	1
Arena	20
Armature Rewinding Repair	15
Armored Car Service	15
Art Gallery, Museum	4
Art Gallery, Commercial	14
Art School	15
Artist's Studio	11
Artist's Supply Store	14
Asphalt Refining, Manufacturing	27
Auctioneer	15
Automated Teller Machine……	13
Automobile Rental	17
Automobile Sales, New, Used	17
Automobile Salvage Yard	27
Automobile Wash	17
Automobile and Allied Activities	17
Automobile Painting/Body Work	17

Automobile Parts and Accessories Store 14
Automobile Repair and Service…… 17

(B)

Bait Shop 15
Bakery 13
Bakery, Wholesale 15
Ballet School 15
Bank with drive-through service 13
Bank without drive-through service……. 11
Bar 12
Barber School 15
Barber Shop…… 13
Beauty School……. 15
Beauty Shop 13
Bicycle Shop 14
Billboard 21
Billiard Parlor 19
Bindery 15
Bio-Fuel Manufacturing…… 27
Blast Furnace 27
Bleaching Powder Manufacturing 26
Boarding House 7
Boat Sales 17
Boiler Works 27
Book Store 14
Book Store, Adult 15
Bottled Gas 15
Bottling Plant 25
Bowling Alley 19
Brass Manufacturing 26
Brick Manufacturing, Tile Manufacturing 27
Broadcasting Studio 11
Building Contract Construction 25
Building Materials Store 14
Bus Station 17
Business Machine Repair 15
Business Machine Sales 14
Business School 15
Business Sign 21
Butcher Shop……. 14

(C)

Cabinet Maker 15
Café 12
Cafeteria 12
Camera & Photography Supply 14
Camper Sales 17
Camp, Day 4
Campground 20
Candy Store 13
Carnival 2
Carpentry 15
Carpet Installation & Repair 15

Carpet Store 14
Caterer 14
Cellophane Manufacturing 27
Celluloid Manufacturing 27
Cement, Portland 24
Cemetery 2
Cesspool Cleaning Service 15
Children's Nursery 4
China, Glassware & Metal Ware Store 14
Chiropractor……. 11
Chlorine Manufacturing or Processing 27
Church 4
Circus 2
Clothing and Accessories Store 14
Club, Night 12
Coal mining, extracting and processing…….. 24
Coffee Shop 12
Coke Manufacturing 27
College, University 4
Commercial, Convenience 13
Commercial, Recreation, Enclosed 19
Commercial, Recreation Intensive (unenclosed) 20
Community Center 4
Computer Store…… 14
Computer Repair 15
Computing Service 11
Concentrated Feeding Operations…….. 0
Concrete Construction Service 25
Concrete Ready-Mix Plant 26
Confectionery Store 13
Confined Animal Feeding Operations…… 0
Construction Facility 2
Construction Heavy-Yard 25
Convalescent Home 7
Convenience Goods and Services 13
Convenience Store 13
Convent 7
Convict Pre-Release Center 2
Copper Manufacture 26
Copy Service 11
Correction Facility 2
Cosmetic Shop 14
Costume Rental Service 14
Credit Union with drive-through window…….. 13
Credit Union without drive-through window……. 11
Crematory 2
Creosote Manufacturing, or Treatment 27
Cultivation 1
Cultural Facilities NEC 4
Cultural and Recreation Facility 4

(D)

Dairy……. 0
Dairy Store 14

Dance Hall 12
Dance School 15
Data Processing Service 11
Data Processing Machine Repair 15
Day Camp 4
Day Care 4
Decorating, Interior (without retail sales) 15
Delicatessen 12
Dental Clinic, Lab 11
Dentist Office 11
Department Store 14
Detention Facility 2
Dextrin Manufacture 27
Disinfectant or Insecticide Manufacture 27
Disinfectant or Exterminating Service 15
Distillation of Bones, Coal, Tar or Wood 27
Doctors Office 11
Drafting Service 11
Drag Strip 20
Drama School 15
Drapery, Curtain, Upholstery Store 14
Drapery Service 15
Dressmaking Shop 14
Drilling of Oil and Gas Wells 24
Drive-In Restaurant 18
Drive-In Theater 20
Driving Range, Golf 20
Drug Store 13
Dry Cleaning 15
Dry Cleaning Pick-Up 13
Dry Goods Store 14
Duplex 6
Dyestuff Manufacture 26

(E)

Eating Establishment other than Drive-In 12
Elderly Housing 7
Electric Regulating Station 3
Electrical Repair Service 15
Electric Substation……. 3
Electrical Supply Store 14
Electronics Store……. 14
Emergency Shelter/Protective Shelter 4
Employment Agency 11
Enclosed Commercial Recreation/NEC 19
Engineering and Surveying Services…… 11
Explosive Manufacture or Storage 27
Extended Care Facility 7
Exterminating Service 15
Extraction, Mining 24

(F)

Fairgrounds 20
Fat Rendering 27

Feed Lot……..	0
Feed Milling and Processing	25
Fence Sales / Installation	15
Fertilizer Manufacture	27
Filing Station	16
Financial Services	11
Fine Arts School	15
Fire Alarm	1
Fire Protection Facility	3
Fire Station	3
Flea Market / Permanent	15
Flood Management Project	1
Floor Coverings Store	14
Florist	14
Food (Convenience)…….	13
Food Specialty	14
Forestry	1
Foster Home	5
Foundry, Metal	27
Fraternity House	7
Frozen Food Locker	15
Fuel Oil Storage and Distribution	25
Funeral Home	15
Furnace Cleaning	15
Furniture Repair	15
Furniture Store	14
Furrier & Fur Shop	14
Fur Storage	14

(G)

Garbage Contract Pickup	26
Garbage Dump	27
Garden Supply Store	14
Gas Extraction……..	24
Gas Manufacture or Storage	27
Gasoline Service Station	16
Gelatin, Glue or Size Manufacture…….	27
General Business Office	11
General Merchandising, NEC	15
Gift Shop	14
Glass Store	15
Glass Manufacturing and Blowing	25
Glue, Gelatin or Size Manufacture	27
Glucose Manufacture	27
Go-Cart Track	20
Golf Course	4
Golf Driving Range	20
Golf, Miniature	19
Governmental Services NEC	2
Grain Elevator	25
Graphite Manufacture	25
Gravel, Sand and Stone Operation	24
Greenhouse, Retail Sales	15
Grocery Store	14

Group Home 7
Gun Club 20
Gun Store……. 14
Gun Smith 14
Gymnasium 19
Gypsum Manufacture 27

(H)

Hardware Store 14
Health Club 19
Health Food Store 14
Heating Construction Contract Service 26
Heating Equipment 15
Heavy Construction Contracting Service 25
Heliport 2
Historical Marker 1
Hobby Shop 14
Home Furnishing Store 14
Home Occupation…….. 28
Horticulture……. 0
Horticultural Nursery / Retail Sales 14
Hospital 4
Hotel 19
Household Appliance Repair 15
Hydroelectric Generation Plant 2

(I)

Ice Cream Store 13
Ice Plant 15
Ice Skating Rink 19
Incineration, Reduction of Dead Animals…….. 27
Garbage and Refuse 27
Ink Manufacture 27
Insecticide Manufacture 27
Insurance Services…… 11
Interior Decorating with Retail Sales 14
Interior Design Consultant with No Retail Sales 11
Instant Bank Machine 13
Iron Smelting 27

(J)

Jail 2
Janitorial Service 15
Jewelry Repair 14
Jewelry Store 14
Junk Yard 27
Juvenile Delinquency, Center 2

(K)

Kennel 15

(L)

Laboratory, Medical and Dental 11
Lamp Black Manufacture 26

Landscape Contractor	15
Language School	15
Laundromat, Self-Service	14
Laundry, Industrial	25
Laundry, Pick-Up	13
Laundry, Service	15
Leather Goods Store	14
Library	4
Lime, Cement, Plaster or Paris Manufacture	27
Linen Supply	15
Linoleum Manufacture	26
Liquor Store	14
Livestock Pasturing Operation……	0
Loan Office	11
Locksmith	14
Lodge	4
Lubrication and Oil Service	16
Luggage Store	14
Lumber Yard	15

(M)

Machine Shop	25
Manufactured Home	8
Marina	4
Masonry Construction Service	25
Massage Parlor	15
Match Manufacturing	27
Mattress and Pillow Repair	15
Mausoleum	2
Meat Market	14
Meat / Fish Processing Plant	26
Medical Clinic, Lab	11
Medical, Dental Supply	14
Metal Foundry	27
Metal and / or Silver Plating and Polishing	26
Mineral Extraction…….	24
Mineral Products Processing	24
Miniature Auto Track	20
Miniature Golf Course	19
Mining (coal, gas, gravel, oil, ores, stone, sand and other minerals)	24
Mini-Storage	11
Mobile Home	9
Mobile Home Sales	17
Modular Home	8
Model Home for display only	15
Modeling School	15
Monastery	7
Monument Sales / excluding shaping	15
Monument Sales and Shaping	26
Motel	19
Motion Picture, Theater, Enclosed	12
Motorcycle Sales	17
Moving and Storage Facility	23
Multifamily Dwelling	7

Museum 4
Musical Instrument Sales 14
Musical Instrument Manufacture 25
Music School 15

(N)

Newspaper Publishing 15
Newsstand 14
Night Club 12
Novelty 14
Novitiate 7
Nursery, Horticulture / Retail Sales 15
Nursery, School 4
Nursing Home 7
Nut Store 13

(O)

Office Building 11
Office Furnishing Sales 14
Office Machine Sales 14
Office and Studio 11
Office Supplies 14
Off Premises…….. 21
Off-Street Parking 10
Oil Cloth or Linoleum Manufacture 26
Oil and Gas Well Drilling 24
Oil and Lubrication Service 16
Oil Refinery 27
Oil Well Cleaning Contract Service 25
On Premises Sign…….. 21
Optician or Optical Lab 11
Orthopedic Appliance Supply 14
Other Trades and Services 15
Outdoor Advertising 21
Outdoor Recreation, NEC 20
Overnight Campground, Recreational Vehicles 20

(P)

Packing and Crating of Goods 15
Painting Contractor 15
Painting Contractor / Storage / Industrial 26
Paint Store 14
Paint, Oil Varnish, Turpentine Manufacture 27
Paper Hanging 15
Paper or Pulp Manufacture by Sulfide Process 27
Parking 10
Parking Garage 10
Parking Lot…… 10
Patio Home…… 6
Pawn Shop 14
Pet Shop 14
Petroleum Refining 27
Petroleum and Gas Extraction……. 24
Pharmacy 13

Pharmacy (provide no sundry or other merchandise sold)…….	11
Phonograph and Record Sales	14
Photocopying	11
Photo finishing	14
Photography Studio	11
Photography Supply Store	14
Pickle, Sausage, Sauerkraut, Vinegar Manufacture	26
Picture Framing	14
Planetarium	4
Planting…….	1
Plastering Contractor	15
Plaster of Paris Manufacture	27
Plastic Products Manufacture……..	25
Plastic Materials Sales	15
Plastic Raw Material, Powder and Resin Manufacture…….	27
Plumbing Fixture Sales	14
Plumbing Shop	14
Plumbing Contractor…….	15
Political Campaign Sign	1
Pool Hall	19
Porcelain Products Manufacture	25
Portable Storage Building Sales	15
Post Office	2
Poultry farming…….	0
Pressure Control Station	3
Printing and Publishing	15
Printing Ink Manufacture	26
Prison	2
Private Club or Lodge	4
Processing of Mineral Products	24
Protective Shelter	4
Public Park	4
Public Tennis Court	4

(Q)

Quarrying (coal, gravel, ores, sands, stone and other minerals)	24
Quadruplex (dwellings)…… ….	6

(R)

Race Track, Auto, Dog, Horse	20
Racquetball Club	19
Radio Repair & Television Repair	14
Radio Station	11
Radio & Television Sales	14
Rayon or Cellophane Manufacture	27
Record Shop	14
Recording Studio	11
Recreation, Indoor Commercial	19
Recreation, Vehicle Sales	17
Recycling Center / Collection Point (aluminum, glass, paper, plastic)	15
Recycling Center / Collection / Processing (NEC)	27
Reducing Salon	14

Refining, Bio-Fuel, Petroleum and other Crude Materials 27
Refuse Dump 27
Rendering Plant 27
Reproduction Services 15
Research, Scientific 22
Reservoir 1
Resident Hotel 7
Residential:
single-family (detached) 5
single-family (attached)…… 6
duplex 6
manufactured Home 8
modular home……. 8
mobile home 9
multifamily 7
….patio home……. 6
quadruplex……. 6
townhouse…….. 6
zero lot-line home……. 6
Residential Treatment Center 4
Restaurant 12
Restaurant, Drive-In 18
Retirement Housing, Retirement Center 7
Re-Upholstering 15
Rifle and Skeet Range / Gun Club 20
Rifle Range Enclosed 19
Roadside Stand……. 0
Rodeo Grounds 20
Rolling Mill 27
Roofing Construction Service 25
Roofing Manufacture……. 27
Rooming House 7
Rubber Manufacture 27
Rug Cleaners 15
Rug Repair 15

(S)

Salvage Yards, NEC 27
Sand Operation 24
Sanitarium 7
Sanitary Landfill 27
Sausage Manufacturer 26
Savings and Loan with drive-through window…….. 13
Savings and Loan without drive-through window…… 11
Satellite Communication Antennas (private)153.024(D)
Schools:
art 15
ballet 15
barber 15
beauty 15
business 15
dance 15
drama 15
fine arts 15

language 15
nursery 4
modeling 15
music 15
public 4
trade 15
other schools offering a compulsory education curriculum 4
Scientific Research, Testing, Development 22
Self-Service Laundromat 14
Services and Protection 3
Service Station 16
Sewage Disposal Facility 2
Sheet Metal Construction 26
Shelter, Civil Defense, Storm 3
Shoddy Manufacturing (yarn, fabric, woolen) 27
Shoe Store…….. 14
Shoe Repair 14
Shopping Goods and Services 14
Sign Advertising 21
Sign Painting 15
Single-family attached dwelling 6
Single-family detached dwelling 5
Size Manufacturer 27
Skateboard track 20
Skating Rink, enclosed 19
Slaughtering of Animals, NEC 27
Slot Car Track 19
Smelting 27
Soap Manufacturing 26
Soda Ash, Caustic Soda & Washing Compound Manufacture 27
Sorority House 7
Souvenir Shop 14
Soy Bean Refining…….. 27
Sporting Goods Store 14
Stadium…… 20
Stationery Shop…….. 14
Stereo Shop…… 14
Stock Yard 27
Stock, Live…… 0
Stonework Contracting Service 25
Storage, General. NEC 23
Storage of Dismantled Autos or any form of Junk 27
Street Sign 1
Studio and Office 11
Sugar Refining 27
Supermarket 14
Swimming Pool Enclosed 19

(T)

Tailor Shop 14
Tallow, Grease, Lard Manufacture or Refining 27
Tank Farm, Petroleum 27
Tanning Salon…… 14
Tanning or Leather or Hide 27

Tar Distillation or Manufacture 27
Tar Roofing Manufacture 27
Tavern 12
Tax Service……. 11
Taxi Service…… 17
Taxidermist 15
Television Repair 14
Television Sales 14
Television Station 11
Tennis Club or Commercial Courts 19
Tennis Court Public 4
Tent Revival 2
Textile Manufacture 26
Theater, Enclosed…….. 12
Theater, Motion Picture, Enclosed 12
Thoroughfare 1
Ticket Office 11
Tile Or Terra Cotta Manufacture 27
Tile Setting Service 15
Tobacco Shop 14
Townhouse 6
Toy Shop 4
Trade School 15
Trades Emitting Objectionable Odor, Heat, Smoke Noise 27
Trailer Sales / Rental 17
Transitional Living Center 4
Transmitting Tower 3
Transportation Ticket Office 11
Travel Agency 11
Tree Farming…….. 0
Truck Rentals 17
Truck Sales 17
Trucking Establishments 23
Turpentine Manufacture 27
Tune-up Service 16

(U)

University 4
Upholstery Repair / Re-upholstery 15
Utility Line 1

(V)

Variety Store 14
Varnish Manufacture 27
Vehicle Repair and Service 17
Vending Machine Sales 15
Veterinarian Clinic (small animals, all activities in building, no exterior runs) 11
Veterinarian Clinic/Hospital (excluding out side animal runs) 14
Veterinarian (outside cages and outside animal runs) 15
Vinegar Manufacture 27
Video Games Arcade (not an Adult Amusement Center) 19

(W)

Wall Paper Store 14

Warehouses, NEC 23
Washing Compound Manufacture 26
Waste Paper Salvage and Reclamation 27
Waste Water Treatment Plant…… 2
Watch Repair 14
Water Slide / Water Park (outdoor) 20
Water Storage Facility 3
Water Treatment Plant 2
Water Well Drilling and Cleaning Service 26
Welding Shop 26
Wholesale Establishments, NEC 23
Wig Shop 14
Window Cleaning 15
Wildlife Preserve 1
Woodworking Shop 15
Wool Scouring, Hair Manufacture 26

(Y)

Yeast Manufacturing 27

(Z)

Zero Lot-Line Home…… 6